POLY
LANEMA

CATÁLOGO DE **PRODUTOS STANDARD** 2023

ÍNDICE

01 **CASQUILHOS SELFOIL**
TIPO A, TIPO B, TIPO C E TIPO D

02 **CASQUILHOS METÁLICOS**
PAP P10, PAP P11, PAP P20, PAF P10, PAF P11, PAW P10, PAW P11 E PAW

03 **SILENCIADORES E FILTROS BRONFIL**
COM ROSCA AUTOBLOCANTE E COM ROSCA DE LATÃO MACIÇO

04 **CHAVETAS**
CHAVETAS DE AJUSTE, CHAVETAS DE DISCO, E PERFIL PARA CHAVETAS

POLY LANEMA

01

CASQUILHOS SELFOIL

TIPO A
TIPO B
TIPO C
TIPO D

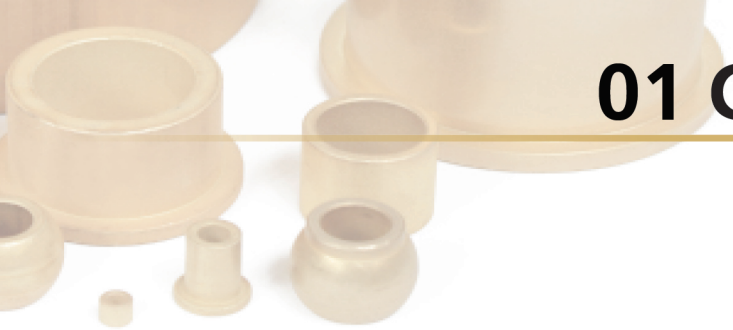

01 CASQUILHOS SELFOIL

TIPO A

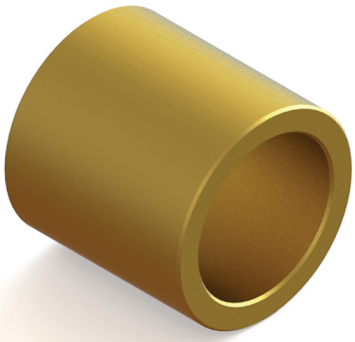

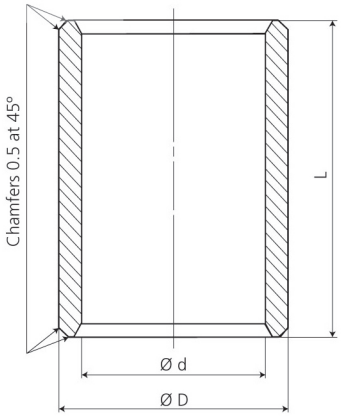

TIPO A

d= Ø int.	D= Ø ext.	L= Longitudes (Tolerância js13)	Qt. por saco
2^{+12}_{+2}	5^{+31}_{+19}	2 -3	25
3^{+12}_{+2}	6^{+31}_{+19}	4 - 5 - 6 -10	25
4^{+16}_{+4}	6^{+31}_{+19}	5 - 8 - 10	25
4^{+16}_{+4}	7^{+38}_{+23}	4 - 8 - 12	25
4^{+16}_{+4}	8^{+38}_{+23}	4 - 5 - 6 - 8 - 10 - 12	25
5^{+16}_{+4}	8^{+38}_{+23}	5 - 8 - 10 - 12 - 15 - 16	25
5^{+16}_{+4}	9^{+38}_{+23}	4 - 5 - 8	25
5^{+16}_{+4}	10^{+38}_{+23}	5 - 6 - 8 - 10 - 12 - 15	25
6^{+16}_{+4}	9^{+38}_{+23}	4 - 6 - 10 - 12 - 16	25
6^{+16}_{+4}	10^{+38}_{+23}	4 - 5 - 6 - 10 - 12 - 15 - 16	25
6^{+16}_{+4}	12^{+46}_{+28}	5 - 6 - 8 - 10 - 12 - 15 - 16	25
7^{+20}_{+5}	10^{+38}_{+23}	5 - 8 - 10	25
8^{+20}_{+5}	10^{+38}_{+23}	6 - 10 - 15	25
8^{+20}_{+5}	11^{+46}_{+28}	6 - 8 - 12 - 16 - 20	25
8^{+20}_{+5}	12^{+46}_{+28}	6 - 8 - 10 - 12 - 15 - 16 - 20	25
8^{+20}_{+5}	14^{+46}_{+28}	8 - 10 - 12 - 15 - 16 - 20	25
9^{+20}_{+5}	12^{+46}_{+28}	6 - 10 - 14	25
9^{+20}_{+5}	14^{+46}_{+28}	10 - 12 - 15 - 20	25
10^{+20}_{+5}	13^{+46}_{+28}	10 - 12 - 15 - 16 - 20 - 25	25
10^{+20}_{+5}	14^{+46}_{+28}	8 - 10 - 16 - 20 - 25	25
10^{+20}_{+5}	15^{+46}_{+28}	10 - 12 - 15 - 16 - 20 - 25	10
10^{+20}_{+5}	16^{+46}_{+28}	8 - 10 - 12 - 15 - 16 - 20 - 25	10
10^{+20}_{+5}	18^{+46}_{+28}	10 - 12 - 15 - 20 - 25	10
12^{+24}_{+6}	14^{+46}_{+28}	10 - 12 - 15 - 20	10
12^{+24}_{+6}	15^{+46}_{+28}	10 - 12 - 15 - 16 - 20 - 25	10
12^{+24}_{+6}	16^{+46}_{+28}	8 - 10 - 12 - 15 - 16 - 20 - 25	10
12^{+24}_{+6}	17^{+46}_{+28}	12 - 15 - 16 - 20 - 25	10
12^{+24}_{+6}	18^{+46}_{+28}	8 - 10 - 12 - 15 - 16 - 20 - 25 - 30	10
12^{+24}_{+6}	20^{+56}_{+35}	12 - 15 - 20 - 25 - 30	10
14^{+24}_{+6}	18^{+46}_{+28}	10 - 14 - 15 - 18 - 20 - 22 - 25 - 28	10
14^{+24}_{+6}	20^{+56}_{+35}	10 - 12 - 14 - 15 - 18 - 20 - 22 - 25 - 28 - 30	10
14^{+24}_{+6}	22^{+56}_{+35}	15 - 20 - 25 - 30	10
15^{+24}_{+6}	18^{+46}_{+28}	15 - 20 - 25 - 30	10
15^{+24}_{+6}	19^{+56}_{+35}	10 - 15 - 16 - 20 - 25 - 32	10
15^{+24}_{+6}	20^{+56}_{+35}	10 - 12 - 15 - 20 - 25 - 30	10
15^{+24}_{+6}	21^{+56}_{+35}	10 - 15 - 16 - 20 - 25 - 32	10
15^{+24}_{+6}	22^{+56}_{+35}	15 - 16 - 20 - 25 - 30	10
16^{+24}_{+6}	20^{+56}_{+35}	12 - 15 - 16 - 20 - 25 - 30 - 32	10
16^{+24}_{+6}	22^{+56}_{+35}	12 - 15 - 16 - 20 - 25 - 30 - 32 - 35	10
17^{+24}_{+6}	22^{+56}_{+35}	15 - 20 - 25 - 30 - 35	10
18^{+24}_{+6}	22^{+56}_{+35}	12 - 15 - 18 - 20 - 22 - 25 - 28 - 30 - 36	10
18^{+24}_{+6}	24^{+56}_{+35}	12 - 18 - 22 - 28 - 30 - 36	10
18^{+24}_{+6}	25^{+56}_{+35}	16 - 18 - 20 - 22 - 25 - 28 - 30 - 35 - 36	10
20^{+28}_{+7}	24^{+56}_{+35}	16 - 20 - 25 - 32	10

Tolerâncias em µ

d= Ø int.	D= Ø ext.	L= Longitudes (Tolerância js13)	Qt. por saco
20^{+28}_{+7}	25^{+56}_{+35}	15 - 16 - 20 - 25 - 30 - 32 - 35	10
20^{+28}_{+7}	26^{+56}_{+35}	15 - 16 - 20 - 25 - 30 - 32 - 35 - 40	10
20^{+28}_{+7}	27^{+56}_{+35}	16 - 20 - 25 - 32	10
20^{+28}_{+7}	28^{+56}_{+35}	16 - 20 - 25 - 30 - 32 - 35 - 40	10
20^{+28}_{+7}	30^{+56}_{+35}	20 - 25 - 30 - 35 - 40	10
22^{+28}_{+7}	27^{+56}_{+35}	15 - 18 - 20 - 22 - 25 - 28 - 30 - 35 - 36 - 40	10
22^{+28}_{+7}	28^{+56}_{+35}	18 - 20 - 22 - 25 - 28 - 30 - 35 - 36 - 40	10
22^{+28}_{+7}	29^{+56}_{+35}	18 - 22 - 28 - 36	10
25^{+28}_{+7}	30^{+56}_{+35}	20 - 25 - 30 - 32 - 35 - 40	10
25^{+28}_{+7}	32^{+68}_{+43}	20 - 25 - 30 - 32 - 35 - 40 - 45	10
25^{+28}_{+7}	35^{+68}_{+43}	25 - 30 - 35 - 40 - 45 - 50	5
28^{+28}_{+7}	32^{+68}_{+43}	20 - 22 - 25 - 28 - 32 - 36 - 40	5
28^{+28}_{+7}	33^{+68}_{+43}	20 - 22 - 25 - 28 - 32 - 36 - 40 - 45	5
28^{+28}_{+7}	35^{+68}_{+43}	25 - 30 - 35 - 40 - 45 - 50	5
28^{+28}_{+7}	36^{+68}_{+43}	22 - 28 - 36 - 45	5
30^{+28}_{+7}	35^{+68}_{+43}	20 - 25 - 30 - 35 - 40 - 45 - 50	5
30^{+28}_{+7}	38^{+68}_{+43}	20 - 24 - 25 - 30 - 35 - 38 - 40 - 45 - 50	5
30^{+28}_{+7}	40^{+68}_{+43}	20 - 25 - 30 - 35 - 40 - 45 - 50	5
32^{+34}_{+9}	38^{+68}_{+43}	20 - 25 - 32 - 40 - 50	5
32^{+34}_{+9}	40^{+68}_{+43}	20 - 25 - 30 - 32 - 35 - 40 - 45 - 50	5
35^{+34}_{+9}	40^{+68}_{+43}	20 - 25 - 30 - 35 - 40 - 45 - 50	5
35^{+34}_{+9}	41^{+68}_{+43}	25 - 35 - 40	5
35^{+34}_{+9}	44^{+68}_{+43}	22 - 28 - 35	5
35^{+34}_{+9}	45^{+68}_{+43}	25 - 30 - 35 - 40 - 45 - 50 - 60	5
36^{+34}_{+9}	42^{+68}_{+43}	22 - 28 - 36 - 45	5
36^{+34}_{+9}	45^{+68}_{+43}	22 - 28 - 36 - 45	5
38^{+34}_{+9}	44^{+68}_{+43}	25 - 35 - 45	5
40^{+34}_{+9}	45^{+68}_{+43}	35 - 40 - 45 - 50	5
40^{+34}_{+9}	46^{+68}_{+43}	25 - 30 - 32 - 40 - 50	5
40^{+34}_{+9}	50^{+68}_{+43}	25 - 32 - 40 - 45 - 50 - 60	5
45^{+34}_{+9}	51^{+83}_{+53}	28 - 36 - 45 - 56	5
45^{+34}_{+9}	55^{+83}_{+53}	30 - 35 - 40 - 45 - 50 - 55 - 60	5
45^{+34}_{+9}	56^{+83}_{+53}	28 - 36 - 45 - 56	5
45^{+34}_{+9}	60^{+83}_{+53}	40 - 45 - 50 - 60	2
50^{+34}_{+9}	56^{+83}_{+53}	32 - 40 - 50 - 53	2
50^{+34}_{+9}	60^{+83}_{+53}	32 - 40 - 45 - 50 - 60	2
55^{+40}_{+10}	65^{+83}_{+53}	40 - 55 - 70	2
60^{+40}_{+10}	70^{+89}_{+59}	56 - 60 - 90 - 120	2
60^{+40}_{+10}	72^{+89}_{+59}	50 - 60 - 70	1
60^{+40}_{+10}	80^{+89}_{+59}	90 - 120	1
63^{+40}_{+10}	70^{+89}_{+59}	40 - 50	1
70^{+40}_{+10}	80^{+89}_{+59}	90 - 120	1
80^{+66}_{+12}	100^{+125}_{+71}	80 - 120	1
100^{+66}_{+12}	120^{+163}_{+79}	80 - 120	1

Tolerâncias em µ

POLYLANEMA

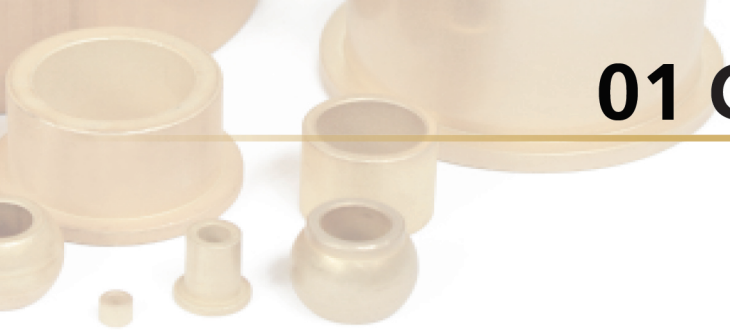

01 CASQUILHOS SELFOIL

TIPO B

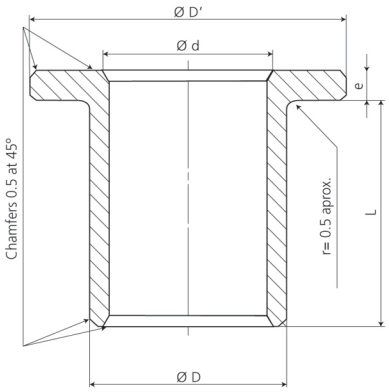

TIPO B

d= Ø int.	D= Ø ext.	D' = Ø Aba	e = Espessura	L= Longitudes (Tolerância js13)	Qt. por saco
3^{+17}_{+3}	6^{+37}_{+19}	9	1.5	4 - 5 - 6 - 10	25
4^{+22}_{+4}	8^{+45}_{+23}	12	2	4 - 5 - 8 - 10 - 12	25
6^{+22}_{+4}	10^{+45}_{+23}	14	2	6 - 10 - 15 - 16	25
8^{+27}_{+5}	12^{+55}_{+28}	16	2	6 - 10 - 12 - 15 - 16	25
9^{+27}_{+5}	14^{+55}_{+28}	19	2.5	6 - 10 - 14	10
10^{+27}_{+5}	13^{+55}_{+28}	16	1.5	10 - 16 - 20	10
10^{+27}_{+5}	14^{+55}_{+28}	18	2	10 - 15 - 20	10
10^{+27}_{+5}	15^{+55}_{+28}	20	3	10 - 15 - 16 - 20	10
10^{+27}_{+5}	16^{+55}_{+28}	22	3	8 - 10 - 16	10
12^{+33}_{+6}	15^{+55}_{+28}	18	1.5	12 - 16 - 20	10
12^{+33}_{+6}	17^{+55}_{+28}	22	3	10 - 12 - 15 - 16 - 20 - 25	10
12^{+33}_{+6}	18^{+55}_{+28}	24	3	8 - 12 - 20	10
14^{+33}_{+6}	18^{+55}_{+28}	22	2	14 - 18 - 22	10
14^{+33}_{+6}	20^{+68}_{+35}	25	3	14 - 15 - 18 - 20 - 22 - 25 - 28 - 30	10
15^{+33}_{+6}	19^{+68}_{+35}	23	2	16 - 20 - 25	10
15^{+33}_{+6}	20^{+68}_{+35}	25	3	15 - 20 - 25 - 30	10
15^{+33}_{+6}	21^{+68}_{+35}	27	3	16 - 20 - 25 - 32	10
16^{+33}_{+6}	20^{+68}_{+35}	24	2	16 - 20 - 25	10
16^{+33}_{+6}	22^{+68}_{+35}	28	3	15 - 16 - 20 - 25 - 30 - 32	10
18^{+33}_{+6}	22^{+68}_{+35}	26	2	18 - 22 - 28	10
18^{+33}_{+6}	24^{+68}_{+35}	30	3	18 - 22 - 28	10
18^{+33}_{+6}	25^{+68}_{+35}	32	4	20 - 25 - 30 - 35	10
20^{+40}_{+7}	24^{+68}_{+35}	28	2	10 - 16 - 20 - 25	10
20^{+40}_{+7}	26^{+68}_{+35}	32	3	15 - 16 - 20 - 25 - 30 - 32	10
20^{+40}_{+7}	28^{+68}_{+35}	35	4	20 - 25 - 30 - 35	10
22^{+40}_{+7}	27^{+68}_{+35}	32	2.5	18 - 22 - 28	10
22^{+40}_{+7}	28^{+68}_{+35}	33	4	15 - 20 - 25 - 30 - 35 - 40	10
22^{+40}_{+7}	29^{+68}_{+35}	36	3.5	18 - 22 - 28 - 36	10
25^{+40}_{+7}	30^{+68}_{+35}	35	2.5	20 - 25 - 32	10
25^{+40}_{+7}	32^{+82}_{+43}	40	4	20 - 25 - 30 - 32 - 35 - 40	10
25^{+40}_{+7}	35^{+82}_{+43}	45	5	16 - 25 - 30	10
28^{+40}_{+7}	33^{+82}_{+43}	38	2.5	22 - 28 - 36	10
28^{+40}_{+7}	36^{+82}_{+43}	44	4	22 - 25 - 28 - 30 - 35 - 36 - 40	10
30^{+40}_{+7}	38^{+82}_{+43}	46	4	20 - 25 - 30	10
30^{+40}_{+7}	40^{+82}_{+43}	48	4	25 - 30 - 35 - 40	10
32^{+48}_{+9}	38^{+82}_{+43}	44	3	20 - 25 - 32	10
32^{+48}_{+9}	40^{+82}_{+43}	48	4	20 - 25 - 30 - 32 - 35 - 40	10
35^{+48}_{+9}	45^{+82}_{+43}	55	5	20 - 25 - 30 - 35 - 40	10
36^{+48}_{+9}	42^{+82}_{+43}	48	3	22 - 28 - 36	10
36^{+48}_{+9}	45^{+82}_{+43}	54	4.5	22 - 28 - 36	10
40^{+48}_{+9}	46^{+82}_{+43}	52	3	25 - 32 - 40	5
40^{+48}_{+9}	50^{+82}_{+43}	60	5	25 - 30 - 32 - 35 - 40	5
45^{+48}_{+9}	51^{+99}_{+53}	57	3	28 - 36 - 45	5
45^{+48}_{+9}	56^{+99}_{+53}	67	5.5	28 - 36 - 45	5
50^{+48}_{+9}	56^{+99}_{+53}	62	3	32 - 40 - 50	5
50^{+48}_{+9}	60^{+99}_{+53}	70	5	32 - 40 - 50	5
60^{+56}_{+10}	70^{+105}_{+59}	80	5	50 - 60	5

Tolerâncias em µ

POLYLANEMA

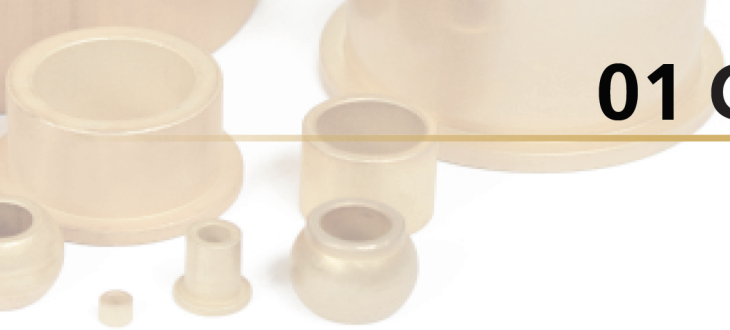

01 CASQUILHOS SELFOIL

TIPO C

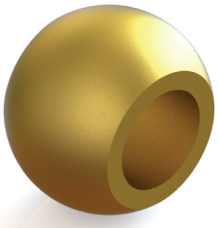

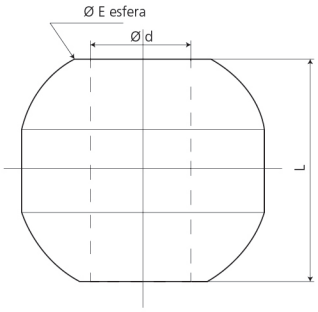

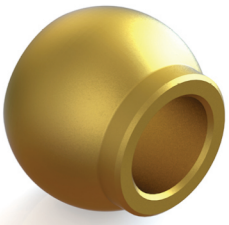

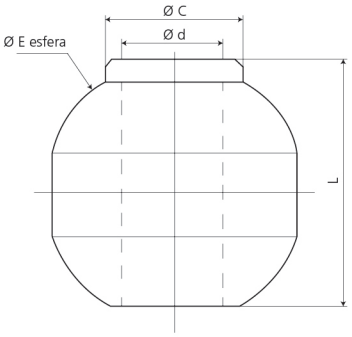

TIPO C

d= Ø int. H7	d= Ø ext. tolerância ±0.05	L= Longitudes (Tolerância ±0.15)	Qt. por saco
4	10	8	25
5	12	9	25
6	14	11	25
7	16	12	25
8	18	13	25
9	20	14.5	25
10	22	16	25
12	23	16	25

TIPO D

d= Ø int. H7	d= Ø ext. tolerância ± 0.05	C=colar tolerância ± 0.05	L=Longitude tol. ± 0.15	Qt. por saco
4	10	6	10	25
5	12	8	11	25
6	14	9	13	25
7	16	10.5	14	25
8	18	12.5	16	25
9	20	14	17	25
10	22	15	18	25
12	23	17.5	18	25

POLY LANEMA

02

CASQUILHOS METÁLICOS

PAP P10
PAP P11
PAP P20
PAF P10
PAF P11
PAW P10
PAW P11
PAW P20

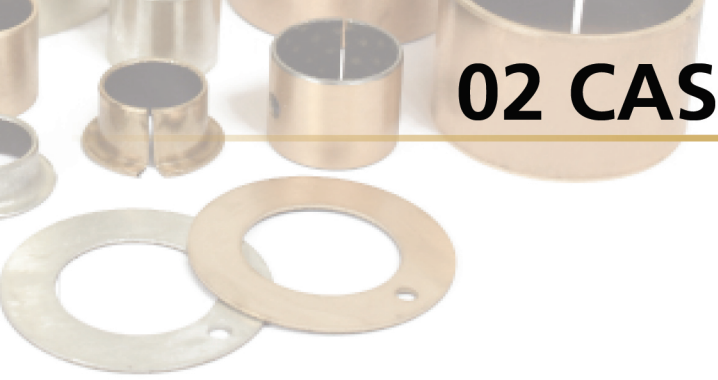

02 CASQUILHOS METÁLICOS

PAP - P10

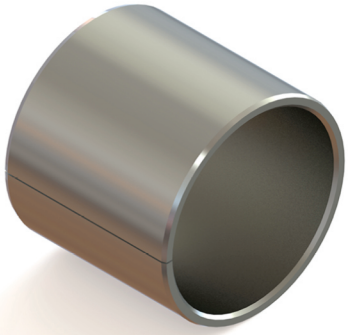

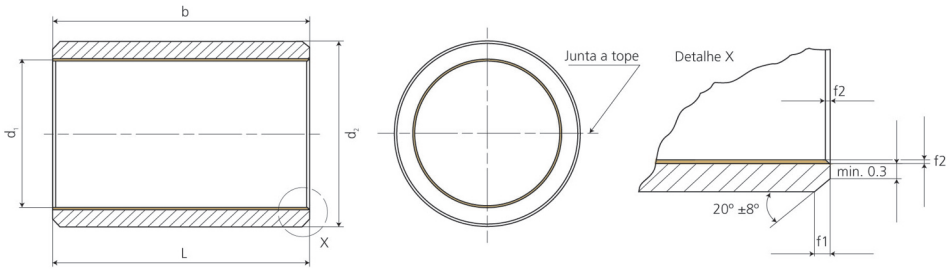

PAP - P10

d= Ø int.	Referência	Peso g	Medidas				
			d_1	d_2	$b_{\pm 0.25}$	f_1 1)	f_2 1)
2	PAP 0203 P10	0.15	2	3,5	3	0.5	0.25
2	PAP 0205 P10	0.25	2	3,5	5	0.5	0.25
3	PAP 0303 P10	0.2	3	4,5	3	0.5	0.25
3	PAP 0304 P10	0.25	3	4,5	4	0.5	0.25
3	PAP 0305 P10	0.3	3	4,5	5	0.5	0.25
3	PAP 0306 P10	0.4	3	4,5	6	0.5	0.25
4	PAP 0403 P10	0.2	4	5,5	3	0.5	0.25
4	PAP 0404 P10	0.3	4	5,5	4	0.5	0.25
4	PAP 0406 P10	0.6	4	5,5	6	0.5	0.25
4	PAP 0410 P10	0.8	4	5,5	10	0.5	0.25
5	PAP 0505 P10	0.7	5	7	5	0.6	0.3
5	PAP 0508 P10	1.1	5	7	8	0.6	0.3
5	PAP 0510 P10	1.4	5	7	10	0.6	0.3
6	PAP 0606 P10	0.9	6	8	6	0.6	0.3
6	PAP 0608 P10	1.4	6	8	8	0.6	0.3
6	PAP 0610 P10	1.7	6	8	10	0.6	0.3
7	PAP 0710 P10	1.8	7	9	10	0.6	0.3
8	PAP 0808 P10	1.7	8	10	8	0.6	0.3
8	PAP 0810 P10	2.1	8	10	10	0.6	0.3
8	PAP 0812 P10	2.5	8	10	12	0.6	0.3
10	PAP 1008 P10	2	10	12	8	0.6	0.3
10	PAP 1010 P10	2.5	10	12	10	0.6	0.3
10	PAP 1012 P10	2.9	10	12	12	0.6	0.3
10	PAP 1015 P10	3.8	10	12	15	0.6	0.3
10	PAP 1020 P10	5.3	10	12	20	0.6	0.3
12	PAP 1208 P10	2	12	14	8	0.6	0.3
12	PAP 1210 P10	3	12	14	10	0.6	0.3
12	PAP 1212 P10	3.7	12	14	12	0.6	0.3
12	PAP 1215 P10	4.7	12	14	15	0.6	0.3
12	PAP 1220 P10	6.1	12	14	20	0.6	0.3
12	PAP 1225 P10	7.6	12	14	25	0.6	0.3
13	PAP 1310 P10	3.2	13	15	10	0.6	0.3
14	PAP 1410 P10	3.5	14	16	10	0.6	0.3
14	PAP 1412 P10	4.3	14	16	12	0.6	0.3
14	PAP 1415 P10	5.4	14	16	15	0.6	0.3
14	PAP 1420 P10	7.1	14	16	20	0.6	0.3
14	PAP 1425 P10	8.8	14	16	25	0.6	0.3
15	PAP 1510 P10	3.7	15	17	10	0.6	0.3
15	PAP 1512 P10	4.5	15	17	12	0.6	0.3
15	PAP 1515 P10	5.7	15	17	15	0.6	0.3
15	PAP 1520 P10	7.6	15	17	20	0.6	0.3
15	PAP 1525 P10	9.4	15	17	25	0.6	0.3
16	PAP 1610 P10	4	16	18	10	0.6	0.3
16	PAP 1612 P10	4.8	16	18	12	0.6	0.3
16	PAP 1615 P10	6.1	16	18	15	0.6	0.3
16	PAP 1620 P10	8.1	16	18	20	0.6	0.3

d= Ø int.	Referência	Peso g	Medidas				
			d_1	d_2	$b_{\pm 0.25}$	f_1 1)	f_2 1)
16	PAP 1625 P10	10.1	16	18	25	0.6	0.3
18	PAP 1815 P10	6.7	18	20	15	0.6	0.3
18	PAP 1820 P10	8.9	18	20	20	0.6	0.3
18	PAP 1825 P10	11.1	18	20	25	0.6	0.3
20	PAP 2010 P10	7.7	20	23	10	0.6	0.4
20	PAP 2015 P10	11.1	20	23	15	0.6	0.4
20	PAP 2020 P10	15.1	20	23	20	0.6	0.4
20	PAP 2025 P10	19.1	20	23	25	0.6	0.4
20	PAP 2030 P10	23	20	23	30	0.6	0.4
22	PAP 2215 P10	12.7	22	25	15	0.6	0.4
22	PAP 2220 P10	16.6	22	25	20	0.6	0.4
22	PAP 2225 P10	21.1	22	25	25	0.6	0.4
22	PAP 2230 P10	25.2	22	25	30	0.6	0.4
24	PAP 2415 P10	13,5	24	27	15	0.6	0.4
24	PAP 2420 P10	17.9	24	27	20	0.6	0.4
24	PAP 2425 P10	22.8	24	27	25	0.6	0.4
24	PAP 2430 P10	27.1	24	27	30	0.6	0.4
25	PAP 2510 P10	9.6	25	28	10	0.6	0.4
25	PAP 2515 P10	14.2	25	28	15	0.6	0.4
25	PAP 2520 P10	19	25	28	20	0.6	0.4
25	PAP 2525 P10	23.9	25	28	25	0.6	0.4
25	PAP 2530 P10	28.4	25	28	30	0.6	0.4
25	PAP 2540 P10	38	25	28	40	0.6	0.4
25	PAP 2550 P10	47.7	25	28	50	0.6	0.4
28	PAP 2820 P10	28.8	28	32	20	1.2	0.4
28	PAP 2830 P10	44	28	32	30	1.2	0.4
30	PAP 3015 P10	22.9	30	34	15	1.2	0.4
30	PAP 3020 P10	30.9	30	34	20	1.2	0.4
30	PAP 3025 P10	38.5	30	34	25	1.2	0.4
30	PAP 3030 P10	46.1	30	34	30	1.2	0.4
30	PAP 3040 P10	63	30	34	40	1.2	0.4
32	PAP 3230 P10	49	32	36	30	1.2	0.4
32	PAP 3240 P10	65	32	36	40	1.2	0.4
35	PAP 3520 P10	35	35	39	20	1.2	0.4
35	PAP 3530 P10	53	35	39	30	1.2	0.4
35	PAP 3540 P10	71	35	39	40	1.2	0.4
35	PAP 3550 P10	89	35	39	50	1.2	0.4
40	PAP 4020 P10	40	40	44	20	1.2	0.4
40	PAP 4030 P10	60	40	44	30	1.2	0.4
40	PAP 4040 P10	81	40	44	40	1.2	0.4
40	PAP 4050 P10	101	40	44	50	1.2	0.4
45	PAP 4530 P10	86	45	50	30	1.8	0.6
45	PAP 4540 P10	113	45	50	40	1.8	0.6
45	PAP 4550 P10	144	45	50	50	1.8	0.6
50	PAP 5020 P10	63	50	55	20	1.8	0.6
50	PAP 5030 P10	95	50	55	30	1.8	0.6

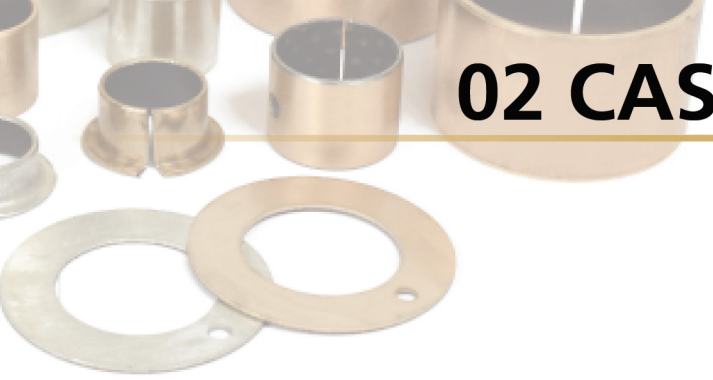

02 CASQUILHOS METÁLICOS

PAP - P10

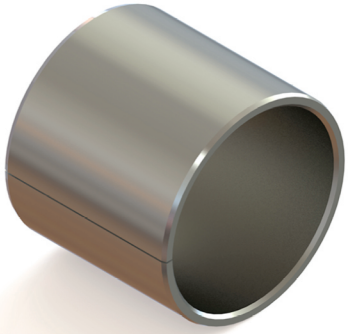

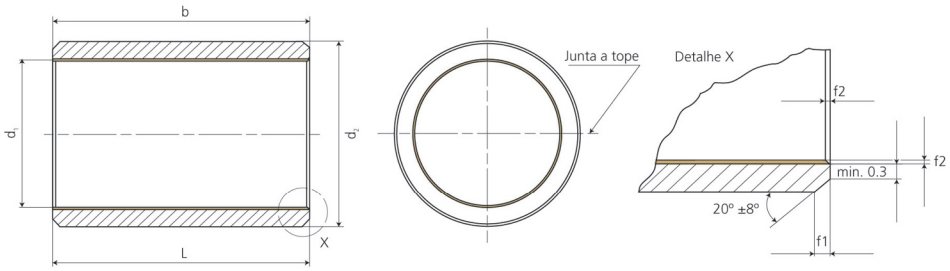

PAP - P10

d= Ø int.	Referência	Peso g	Medidas				
			d_1	d_2	$b_{\pm 0.25}$	f_1 1)	f_2 1)
50	PAP 5040 P10	127	50	55	40	1.8	0.6
50	PAP 5060 P10	188	50	55	60	1.8	0.6
55	PAP 5540 P10	138	55	60	40	1.8	0.6
55	PAP 5560 P10	207	55	60	60	1.8	0.6
60	PAP 6030 P10	113	60	65	30	1.8	0.6
60	PAP 6040 P10	150	60	65	40	1.8	0.6
60	PAP 6060 P10	226	60	65	60	1.8	0.6
60	PAP 6070 P10	265	60	65	70	1.8	0.6
65	PAP 6540 P10	164	65	70	40	1.8	0.6
65	PAP 6550 P10	204	65	70	50	1.8	0.6
65	PAP 6560 P10	244	65	70	60	1.8	0.6
65	PAP 6570 P10	284	65	70	70	1.8	0.6
70	PAP 7040 P10	174	70	75	40	1.8	0.6
70	PAP 7050 P10	218	70	75	50	1.8	0.6
70	PAP 7070 P10	305	70	75	70	1.8	0.6
75	PAP 7540 P10	187	75	80	40	1.8	0.6
75	PAP 7550 P10	233	75	80	50	1.8	0.6
75	PAP 7560 P10	280	75	80	60	1.8	0.6
75	PAP 7580 P10	374	75	80	80	1.8	0.6
80	PAP 8040 P10	197	80	85	40	1.8	0.6
80	PAP 8060 P10	297	80	85	60	1.8	0.6
80	PAP 8080 P10	395	80	85	80	1.8	0.6
80	PAP 80100 P10	493	80	85	100	1.8	0.6
85	PAP 8560 P10	313	85	90	60	1.8	0.6
85	PAP 85100 P10	525	85	90	100	1.8	0.6
90	PAP 9050 P10	277	90	95	50	1.8	0.6
90	PAP 9060 P10	333	90	95	60	1.8	0.6
90	PAP 90100 P10	551	90	95	100	1.8	0.6
95	PAP 9560 P10	351	95	100	60	1.8	0.6
95	PAP 95100 P10	583	95	100	100	1.8	0.6

d= Ø int.	Referência	Peso g	Medidas				
			d_1	d_2	$b_{\pm 0.25}$	f_1 1)	f_2 1)
100	PAP 10050 P10	312	100	105	50	1.8	0.6
100	PAP 10060 P10	388	100	105	60	1.8	0.6
100	PAP 100115 P10	742	100	105	115	1.8	0.6
105	PAP 10560 P10	370	105	110	60	1.8	0.6
105	PAP 105115 P10	712	105	110	115	1.8	0.6
110	PAP 11060 P10	410	110	115	60	1.8	0.6
110	PAP 110115 P10	775	110	115	115	1.8	0.6
115	PAP 11550 P10	350	115	120	50	1.8	0.6
115	PAP 11560 P10	400	115	120	60	1.8	0.6
115	PAP 11570 P10	450	115	120	70	1.8	0.6
120	PAP 12060 P10	435	120	125	60	1.8	0.6
120	PAP 120100 P10	730	120	125	100	1.8	0.6
125	PAP 125100 P10	760	125	130	100	1.8	0.6
130	PAP 13060 P10	470	130	135	60	1.8	0.6
130	PAP 130100 P10	795	130	135	100	1.8	0.6
135	PAP 13560 P10	490	135	140	60	1.8	0.6
135	PAP 13580 P10	652	135	140	80	1.8	0.6
140	PAP 14060 P10	515	140	145	60	1.8	0.6
140	PAP 140100 P10	855	140	145	100	1.8	0.6
150	PAP 15060 P10	550	150	155	60	1.8	0.6
150	PAP 15080 P10	730	150	155	80	1.8	0.6
150	PAP 150100 P10	915	150	155	100	1.8	0.6
160	PAP 16080 P10	776	160	165	80	1.8	0.6
160	PAP 160100 P10	970	160	165	100	1.8	0.6
180	PAP 180100 P10	1100	180	185	100	1.8	0.6
200	PAP 200100 P10	1220	200	205	100	1.8	0.6
220	PAP 220100 P10	1320	220	225	100	1.8	0.6
250	PAP 250100 P10	1495	250	255	100	1.8	0.6
300	PAP 300100 P10	1760	300	305	100	1.8	0.6

Tolerâncias de montagem recomendadas:	Eixo	Alojamento
	dw < 5: h6	d_G < 5,5: H6
	5 ≤ dw < 80: f7	5,5< d_G < 80: H7
	80≤ dw :h8	

Tolerâncias para os chanfros exteriores e interiores :

f_1 = 0.5: ± 0.3	f_2 = 0.25: ± 0.15
f_1 = 0.6: ± 0.4	f_2 = 0.3: ± 0.2
f_1 = 1.2: ± 0.4	f_2 = 0.4: ± 0.3
f_1 = 1.8: ± 0.6	f_2 = 0.6: ± 0.4

POLYLANEMA

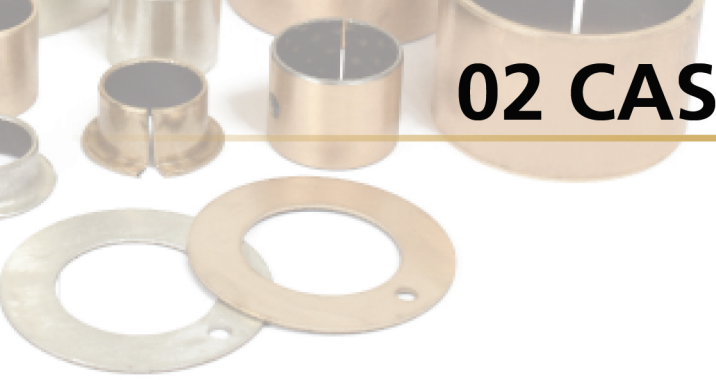

02 CASQUILHOS METÁLICOS

PAP - P11

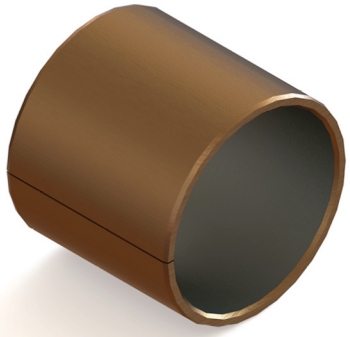

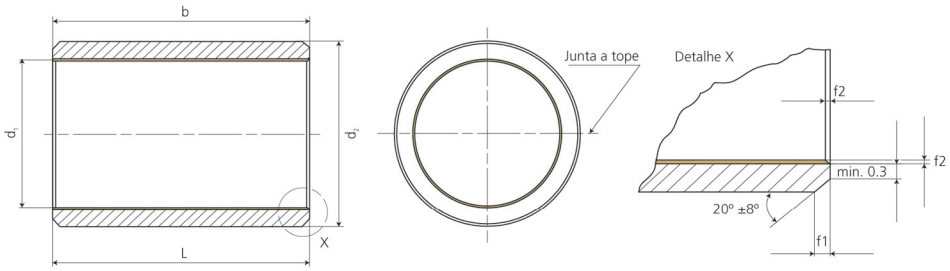

PAP - P11

d= Ø int.	Referência	Peso g	Medidas				
			d_1	d_2	$b_{\pm 0.25}$	f_1 1)	f_2 1)
4	PAP 0406 P11	0.8	4	6	6	0.6	0.3
5	PAP 0505 P11	0.8	5	7	5	0.6	0.3
6	PAP 0606 P11	1.1	6	8	6	0.6	0.3
6	PAP 0610 P11	1.9	6	8	10	0.6	0.3
8	PAP 0808 P11	1.8	8	10	8	0.6	0.3
8	PAP 0810 P11	2.2	8	10	10	0.6	0.3
8	PAP 0812 P11	2.7	8	10	12	0.6	0.3
10	PAP 1005 P11	1.4	10	12	5	0.6	0.3
10	PAP 1010 P11	2.7	10	12	10	0.6	0.3
10	PAP 1015 P11	4.2	10	12	15	0.6	0.3
10	PAP 1020 P11	5.6	10	12	20	0.6	0.3
12	PAP 1210 P11	3.3	12	14	10	0.6	0.3
12	PAP 1212 P11	4.1	12	14	12	0.6	0.3
12	PAP 1215 P11	5.2	12	14	15	0.6	0.3
12	PAP 1220 P11	6.9	12	14	20	0.6	0.3
12	PAP 1225 P11	8.7	12	14	25	0.6	0.3
14	PAP 1415 P11	6	14	16	15	0.6	0.3
15	PAP 1515 P11	6.8	15	17	15	0.6	0.3
15	PAP 1525 P11	10.3	15	17	25	0.6	0.3
16	PAP 1615 P11	6.7	16	18	15	0.6	0.3
16	PAP 1625 P11	11	16	18	25	0.6	0.3
18	PAP 1815 P11	7.4	18	20	15	0.6	0.3
18	PAP 1825 P11	12.2	18	20	25	0.6	0.3
20	PAP 2015 P11	13.3	20	23	15	0.6	0.4
20	PAP 2020 P11	17	20	23	20	0.6	0.4
20	PAP 2025 P11	21.3	20	23	25	0.6	0.4
20	PAP 2030 P11	25.5	20	23	30	0.6	0.4
22	PAP 2215 P11	15.7	22	25	15	0.6	0.4
22	PAP 2220 P11	20.9	22	25	20	0.6	0.4

d= Ø int.	Referência	Peso g	Medidas				
			d_1	d_2	$b_{\pm 0.25}$	f_1 1)	f_2 1)
22	PAP 2225 P11	26.5	22	25	25	0.6	0.4
24	PAP 2430 P11	34.1	24	27	30	0.6	0.4
25	PAP 2525 P11	29.4	25	28	25	0.6	0.4
25	PAP 2530 P11	35.3	25	28	30	0.6	0.4
28	PAP 2830 P11	46	28	32	30	1.2	0.4
30	PAP 3020 P11	36.8	30	34	20	1.2	0.4
30	PAP 3030 P11	55	30	34	30	1.2	0.4
30	PAP 3040 P11	74	30	34	40	1.2	0.4
35	PAP 3520 P11	44	35	39	20	1.2	0.4
35	PAP 3530 P11	66	35	39	30	1.2	0.4
40	PAP 4050 P11	119	40	44	50	1.2	0.4
45	PAP 4550 P11	186	45	50	50	1.8	0.6
50	PAP 5030 P11	134	50	55	30	1.8	0.6
50	PAP 5040 P11	179	50	55	40	1.8	0.6
50	PAP 5060 P11	269	50	55	60	1.8	0.6
55	PAP 5540 P11	155	55	60	40	1.8	0.6
60	PAP 6040 P11	168	60	65	40	1.8	0.6
60	PAP 6050 P11	211	60	65	50	1.8	0.6
60	PAP 6060 P11	253	60	65	60	1.8	0.6
60	PAP 6070 P11	295	60	65	70	1.8	0.6
70	PAP 7050 P11	245	70	75	50	1.8	0.6
70	PAP 7070 P11	342	70	75	70	1.8	0.6
80	PAP 8060 P11	332	80	85	60	1.8	0.6
80	PAP 80100 P11	554	80	85	100	1.8	0.6
90	PAP 9060 P11	353	90	95	60	1.8	0.6
90	PAP 90100 P11	588	90	95	100	1.8	0.6
95	PAP 9560 P11	430	95	100	60	1.8	0.6
100	PAP 10060 P11	412	100	105	60	1.8	0.6
100	PAP 100115 P11	790	100	105	115	1.8	0.6

	Eixo	Alojamento
Tolerâncias de montagem recomendadas:	5 ≤ dw < 80: f7 80≤ dw :h8	H7

Tolerâncias para os chanfros exteriores e interiores :

f_1 = 0.6: ± 0.4 f_2 = 0.3: ± 0.2
f_1 = 1.2: ± 0.4 f_2 = 0.4: ± 0.3
f_1 = 1.8: ± 0.6 f_2 = 0.6: ± 0.4

POLYLANEMA

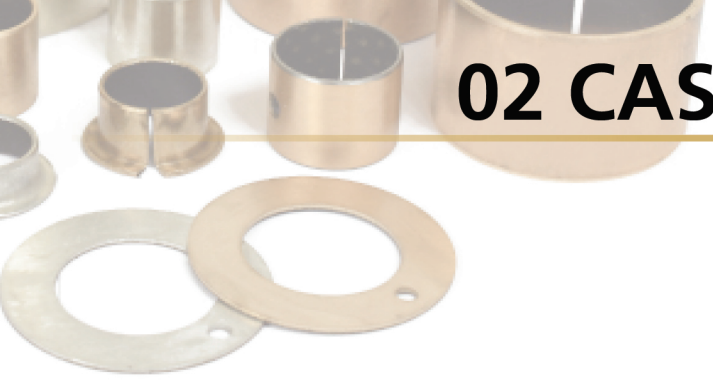

02 CASQUILHOS METÁLICOS

PAP - P20

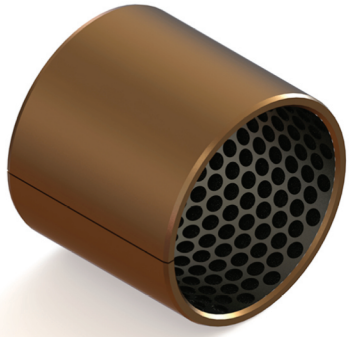

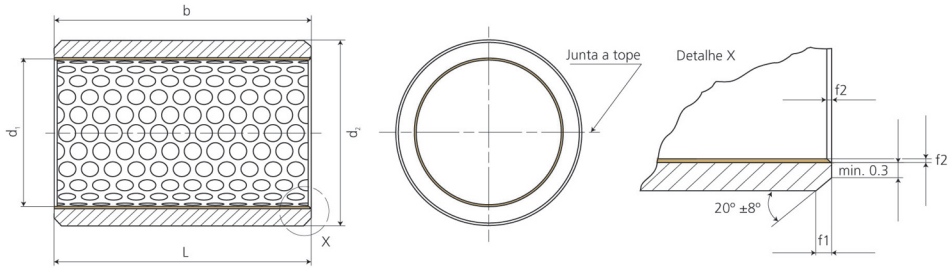

PAP - P20

d= Ø int.	Referência	Peso g	Medidas					
			d_1	d_2	$b_{\pm 0.25}$	f_1 [1])	f_2 [1])	d_7
8	PAP 0808 P20	1.6	8	10	8	0.6	0.3	-[2])
8	PAP 0810 P20	2	8	10	10	0.6	0.3	-[2])
8	PAP 0812 P20	2.4	8	10	12	0.6	0.3	-[2])
10	PAP 1008 P20	1.8	10	12	8	0.6	0.3	-[2])
10	PAP 1010 P20	2.3	10	12	10	0.6	0.3	3
10	PAP 1015 P20	3.5	10	12	15	0.6	0.3	3
12	PAP 1210 P20	3	12	14	10	0.6	0.3	3
12	PAP 1212 P20	3.5	12	14	12	0.6	0.3	3
12	PAP 1215 P20	4.4	12	14	15	0.6	0.3	3
12	PAP 1220 P20	6	12	14	20	0.6	0.3	3
14	PAP 1420 P20	6.7	14	16	20	0.6	0.3	3
15	PAP 1510 P20	3.5	15	17	10	0.6	0.3	3
15	PAP 1515 P20	5.3	15	17	15	0.6	0.3	3
15	PAP 1525 P20	8.8	15	17	25	0.6	0.3	3
16	PAP 1612 P20	4.5	16	18	12	0.6	0.3	3
16	PAP 1615 P20	5.6	16	18	15	0.6	0.3	3
16	PAP 1620 P20	7.5	16	18	20	0.6	0.3	3
18	PAP 1815 P20	6.3	18	20	15	0.6	0.3	3
18	PAP 1820 P20	8.5	18	20	20	0.6	0.3	3
20	PAP 2015 P20	10.5	20	23	15	0.6	0.4	3
20	PAP 2020 P20	14	20	23	20	0.6	0.4	3
20	PAP 2025 P20	17.5	20	23	25	0.6	0.4	3
20	PAP 2030 P20	23	20	23	30	0.6	0.4	3
22	PAP 2220 P20	15.4	22	25	20	0.6	0.4	3
25	PAP 2515 P20	14.2	25	28	15	0.6	0.4	4
25	PAP 2520 P20	19	25	28	20	0.6	0.4	4
25	PAP 2525 P20	22	25	28	25	0.6	0.4	4
25	PAP 2530 P20	26.4	25	28	30	0.6	0.4	4
28	PAP 2830 P20	40	28	32	30	1.2	0.4	4
30	PAP 3020 P20	28.6	30	34	20	1.2	0.4	4
30	PAP 3025 P20	35.8	30	34	25	1.2	0.4	4

d= Ø int.	Referência	Peso g	Medidas					
			d_1	d_2	$b_{\pm 0.25}$	f_1 [1])	f_2 [1])	d_7
30	PAP 3030 P20	42.9	30	34	30	1.2	0.4	4
30	PAP 3040 P20	57	30	34	40	1.2	0.4	4
32	PAP 3230 P20	48	32	36	30	1.2	0.4	4
35	PAP 3520 P20	33	35	39	20	1.2	0.4	4
35	PAP 3530 P20	49	35	39	30	1.2	0.4	4
35	PAP 3550 P20	88	35	39	50	1.2	0.4	4
40	PAP 4020 P20	37	40	44	20	1.2	0.4	4
40	PAP 4030 P20	56	40	44	30	1.2	0.4	4
40	PAP 4040 P20	75	40	44	40	1.2	0.4	4
40	PAP 4050 P20	93	40	44	50	1.2	0.4	4
45	PAP 4550 P20	133	45	50	50	1.8	0.6	5
50	PAP 5025 P20	78	50	55	25	1.8	0.6	5
50	PAP 5040 P20	118	50	55	40	1.8	0.6	5
50	PAP 5060 P20	176	50	55	60	1.8	0.6	5
55	PAP 5540 P20	137	55	60	40	1.8	0.6	5
60	PAP 6030 P20	104	60	65	30	1.8	0.6	6
60	PAP 6040 P20	139	60	65	40	1.8	0.6	6
60	PAP 6060 P20	209	60	65	60	1.8	0.6	6
70	PAP 7040 P20	173	70	75	40	1.8	0.6	6
70	PAP 7050 P20	202	70	75	50	1.8	0.6	6
70	PAP 7070 P20	303	70	75	70	1.8	0.6	6
75	PAP 7540 P20	184	75	80	40	1.8	0.6	6
75	PAP 7580 P20	370	75	80	80	1.8	0.6	6
80	PAP 8040 P20	184	80	85	40	1.8	0.6	6
80	PAP 8055 P20	271	80	85	55	1.8	0.6	6
80	PAP 8060 P20	276	80	85	60	1.8	0.6	6
80	PAP 8080 P20	394	80	85	80	1.8	0.6	6
90	PAP 9060 P20	310	90	95	60	1.8	0.6	6
100	PAP 10050 P20	285	100	105	50	1.8	0.6	8
100	PAP 10060 P20	343	100	105	60	1.8	0.6	8

	Eixo	Alojamento
Tolerâncias de montagem recomendadas:	h8	H7

Tolerâncias para os chanfros exteriores e interiores :

$f_1 = 0.6: \pm 0.4$ $f_2 = 0.3: \pm 0.2$
$f_1 = 1.2: \pm 0.4$ $f_2 = 0.4: \pm 0.3$
$f_1 = 1.8: \pm 0.6$ $f_2 = 0.6: \pm 0.4$

POLYLANEMA

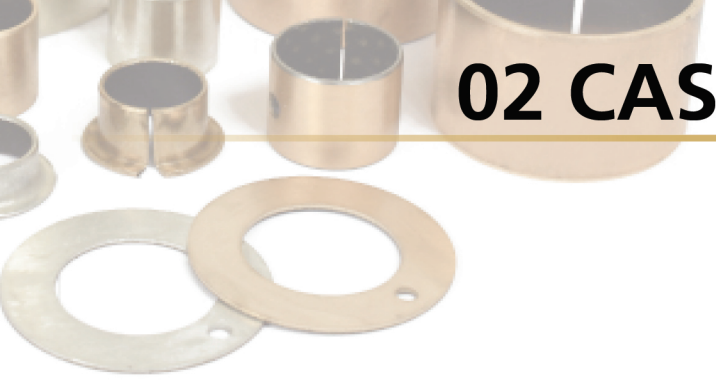

02 CASQUILHOS METÁLICOS

PAF - P10

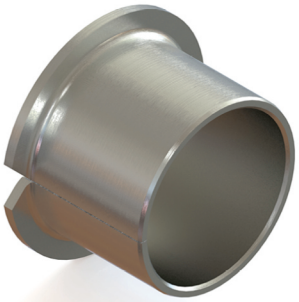

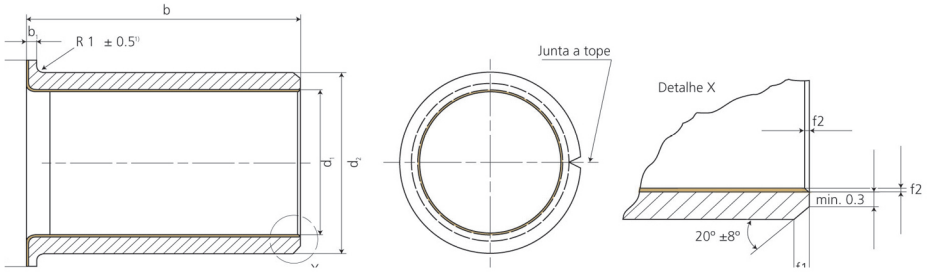

PAF - P10

Diâmetro do veio	Referência	Peso g	Medidas					Medidas de montagem	
			d_1	d_2	d_3 ±0.5	b ±0.25	b_1 -0.2	f_1	f_2
6	PAF 06040 P10	0.9	6	8	12	4	1	0.6 ± 0.4	0.3 ± 0.2
6	PAF 06070 P10	1.6	6	8	12	7	1	0.6 ± 0.4	0.3 ± 0.2
6	PAF 06080 P10	1.7	6	8	12	8	1	0.6 ± 0.4	0.3 ± 0.2
8	PAF 08055 P10	1.7	8	10	15	5.5	1	0.6 ± 0.4	0.3 ± 0.2
8	PAF 08075 P10	2.1	8	10	15	7.5	1	0.6 ± 0.4	0.3 ± 0.2
8	PAF 08095 P10	2.5	8	10	15	9.5	1	0.6 ± 0.4	0.3 ± 0.2
10	PAF 10070 P10	2.5	10	12	18	7	1	0.6 ± 0.4	0.3 ± 0.2
10	PAF 10090 P10	2.9	10	12	18	9	1	0.6 ± 0.4	0.3 ± 0.2
10	PAF 10120 P10	3.8	10	12	18	12	1	0.6 ± 0.4	0.3 ± 0.2
10	PAF 10170 P10	5.4	10	12	18	17	1	0.6 ± 0.4	0.3 ± 0.2
12	PAF 12070 P10	3	12	14	20	7	1	0.6 ± 0.4	0.3 ± 0.2
12	PAF 12090 P10	3.7	12	14	20	9	1	0.6 ± 0.4	0.3 ± 0.2
12	PAF 12120 P10	4.7	12	14	20	12	1	0.6 ± 0.4	0.3 ± 0.2
12	PAF 12170 P10	6.1	12	14	20	17	1	0.6 ± 0.4	0.3 ± 0.2
14	PAF 14120 P10	5.4	14	16	22	12	1	0.6 ± 0.4	0.3 ± 0.2
14	PAF 14170 P10	7.1	14	16	22	17	1	0.6 ± 0.4	0.3 ± 0.2
15	PAF 15090 P10	4.4	15	17	23	9	1	0.6 ± 0.4	0.3 ± 0.2
15	PAF 15120 P10	5.7	15	17	23	12	1	0.6 ± 0.4	0.3 ± 0.2
15	PAF 15170 P10	7.7	15	17	23	17	1	0.6 ± 0.4	0.3 ± 0.2
16	PAF 16120 P10	6	16	18	24	12	1	0.6 ± 0.4	0.3 ± 0.2
16	PAF 16170 P10	8.3	16	18	24	17	1	0.6 ± 0.4	0.3 ± 0.2
18	PAF 18120 P10	6.7	18	20	26	12	1	0.6 ± 0.4	0.3 ± 0.2
18	PAF 18170 P10	8.9	18	20	26	17	1	0.6 ± 0.4	0.3 ± 0.2
18	PAF 18220 P10	11.1	18	20	26	22	1	0.6 ± 0.4	0.3 ± 0.2
20	PAF 20115 P10	11.6	20	23	30	11.5	1.5	0.6 ± 0.4	0.4 ± 0.3
20	PAF 20165 P10	15.1	20	23	30	16.5	1.5	0.6 ± 0.4	0.4 ± 0.3
20	PAF 20215 P10	19.1	20	23	30	21.5	1.5	0.6 ± 0.4	0.4 ± 0.3
25	PAF 25115 P10	14.2	25	28	35	11.5	1.5	0.6 ± 0.4	0.4 ± 0.3
25	PAF 25165 P10	19	25	28	35	16.5	1.5	0.6 ± 0.4	0.4 ± 0.3
25	PAF 25215 P10	23.9	25	28	35	21.5	1.5	0.6 ± 0.4	0.4 ± 0.3
30	PAF 30160 P10	30.9	30	34	42	16	2	1.2 ± 0.4	0.4 ± 0.3
30	PAF 30260 P10	46.1	30	34	42	26	2	1.2 ± 0.4	0.4 ± 0.3
35	PAF 35160 P10	35.4	35	39	47	16	2	1.2 ± 0.4	0.4 ± 0.3
35	PAF 35260 P10	52.7	35	39	47	26	2	1.2 ± 0.4	0.4 ± 0.3
40	PAF 40260 P10	60	40	44	53	26	2	1.2 ± 0.4	0.4 ± 0.3

	Eixo	Alojamento
Tolerâncias de montagem recomendadas:	f7	H7

Tolerâncias do eixo ≤ 8 : R1

POLYLANEMA

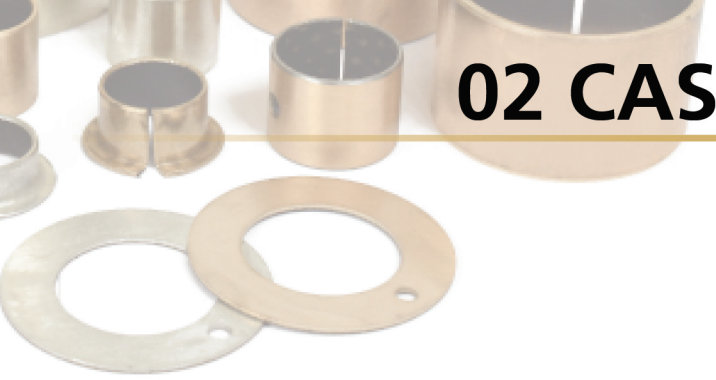

02 CASQUILHOS METÁLICOS

PAF - P11

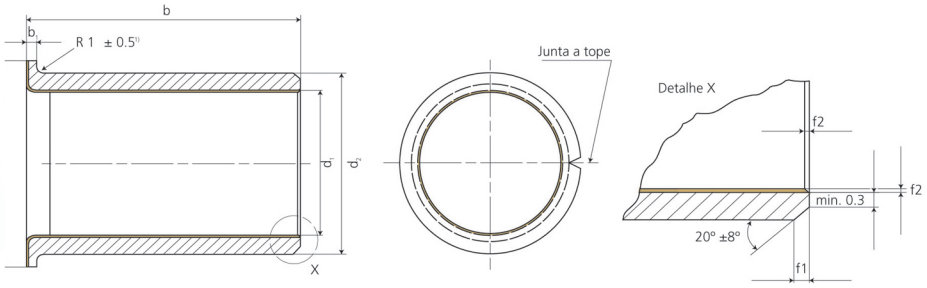

PAF - P11

Diâmetro do veio	Referência	Peso g	Medidas					Medidas de montagem	
			d_1	d_2	d_3 ±0.5	b ±0.25	b_1 -0.2	f_1	f_2
6	PAF 06080 P11	1.7	6	8	12	8	1	0.6 ± 0.4	0.3 ±0.2
8	PAF 08055 P11	1.7	8	10	15	5.5	1	0.6 ± 0.4	0.3 ±0.2
8	PAF 08095 P11	2.5	8	10	15	9.5	1	0.6 ± 0.4	0.3 ±0.2
10	PAF 10070 P11	2.5	10	12	18	7	1	0.6 ± 0.4	0.3 ±0.2
10	PAF 10120 P11	3.8	10	12	18	12	1	0.6 ± 0.4	0.3 ±0.2
10	PAF 10170 P11	5.4	10	12	18	17	1	0.6 ± 0.4	0.3 ±0.2
12	PAF 12070 P11	3	12	14	20	7	1	0.6 ± 0.4	0.3 ±0.2
12	PAF 12090 P11	3.7	12	14	20	9	1	0.6 ± 0.4	0.3 ±0.2
12	PAF 12120 P11	4.7	12	14	20	12	1	0.6 ± 0.4	0.3 ±0.2
15	PAF 15120 P11	5.7	15	17	23	12	1	0.6 ± 0.4	0.3 ±0.2
15	PAF 15170 P11	7.7	15	17	23	17	1	0.6 ± 0.4	0.3 ±0.2
16	PAF 16120 P11	6	16	18	24	12	1	0.6 ± 0.4	0.3 ±0.2
18	PAF 18100 P11	5	18	20	26	10	1	0.6 ± 0.4	0.3 ±0.2
18	PAF 18220 P11	11.1	18	20	26	22	1	0.6 ± 0.4	0.3 ±0.2
20	PAF 20115 P11	11.6	20	23	30	11.5	1.5	0.6 ± 0.4	0.4 ±0.3
20	PAF 20165 P11	15.1	20	23	30	16.5	1.5	0.6 ± 0.4	0.4 ±0.3
25	PAF 25215 P11	23.9	25	28	35	21.5	1.5	0.6 ± 0.4	0.4 ±0.3
30	PAF 30160 P11	30.9	30	34	42	16	2	1.2 ±0.4	0.4 ±0.3
30	PAF 30260 P11	46.1	30	34	42	26	2	1.2 ±0.4	0.4 ±0.3
35	PAF 35260 P11	52.7	35	39	47	26	2	1.2 ±0.4	0.4 ±0.3
40	PAF 40260 P11	59	40	44	53	26	2	1.2 ±0.4	0.4 ±0.3

	Eixo	Alojamento
Tolerâncias de montagem recomendadas:	f7	H7

Tolerâncias do eixo ≤ 8 : $R1_{-0.5}$

POLYLANEMA

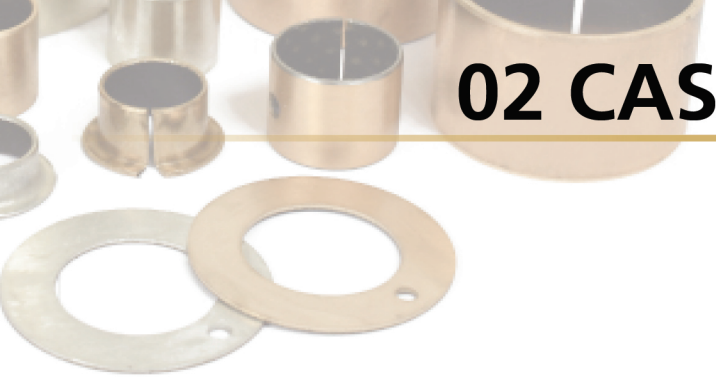

02 CASQUILHOS METÁLICOS

PAW - P10

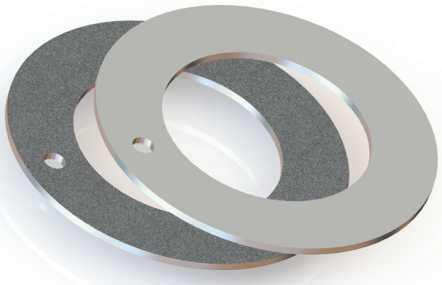

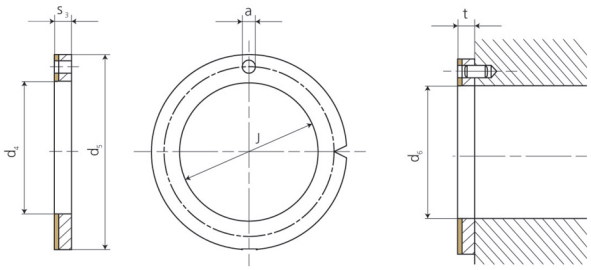

PAW - P10

Referência	Peso g	Medidas					Medidas de montagem	
		d_4 +0.25	d_5 -0.25	s_3 -0.05	J ±0.12	a $^{+0.4}_{+0.1}$	t ±0.2	d_6 +0.12
PAW 10 P10	2.6	10	20	1.5	15	1.5	1	20
PAW 12 P10	3.8	12	24	1.5	18	1.5	1	24
PAW 14 P10	4	14	26	1.5	20	2	1	26
PAW 16 P10	5.5	16	30	1.5	22	2	1	30
PAW 18 P10	6	18	32	1.5	25	2	1	32
PAW 20 P10	8	20	36	1.5	28	3	1	36
PAW 22 P10	8.5	22	38	1.5	30	3	1	38
PAW 26 P10	11.1	26	44	1.5	35	3	1	44
PAW 28 P10	13.3	28	48	1.5	38	4	1	48
PAW 32 P10	16.3	32	54	1.5	43	4	1	54
PAW 38 P10	21	38	62	1.5	50	4	1	62
PAW 42 P10	22.4	42	66	1.5	54	4	1	66
PAW 48 P10	36.8	48	74	2	61	4	1.5	74
PAW 52 P10	38.8	52	78	2	65	4	1.5	78
PAW 62 P10	48.8	62	90	2	76	4	1.5	90

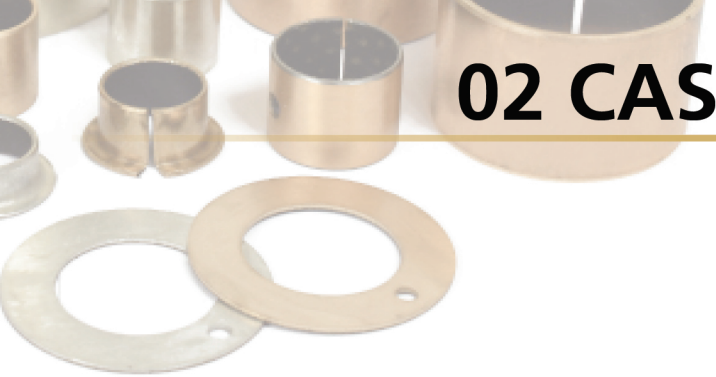

02 CASQUILHOS METÁLICOS

PAW - P11

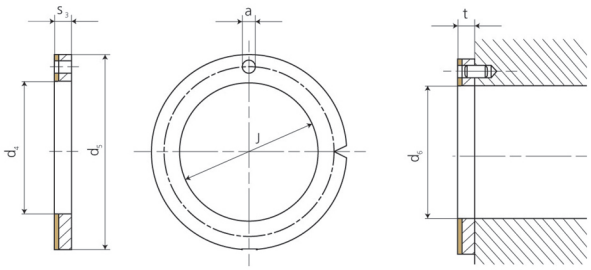

PAW - P11

Referência	Peso g	Medidas					Medidas de montagem	
		d_4 +0.25	d_5 -0.25	s_3 -0.05	J ±0.12	a $^{+0.4}_{+0.1}$	t ±0.2	d_6 +0.12
PAW 10 P11	2.6	10	20	1.5	15	1.5	1	20
PAW 12 P11	3.8	12	24	1.5	18	1.5	1	24
PAW 14 P11	4	14	26	1.5	20	2	1	26
PAW 16 P11	5.5	16	30	1.5	22	2	1	30
PAW 18 P11	6	18	32	1.5	25	2	1	32
PAW 20 P11	8	20	36	1.5	28	3	1	36
PAW 22 P11	8.5	22	38	1.5	30	3	1	38
PAW 26 P11	11.1	26	44	1.5	35	3	1	44
PAW 28 P11	13.3	28	48	1.5	38	4	1	48
PAW 32 P11	16.3	32	54	1.5	43	4	1	54
PAW 38 P11	21	38	62	1.5	50	4	1	62
PAW 42 P11	22.4	42	66	1.5	54	4	1	66
PAW 48 P11	36.8	48	74	2	61	4	1.5	74
PAW 52 P11	38.8	52	78	2	65	4	1.5	78
PAW 62 P11	48.8	62	90	2	76	4	1.5	90

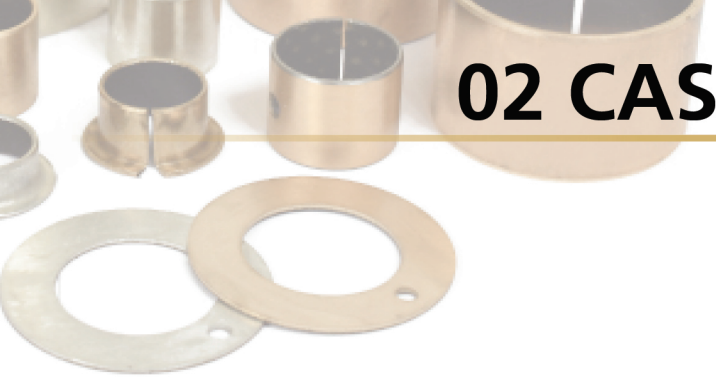

02 CASQUILHOS METÁLICOS

PAW - P20

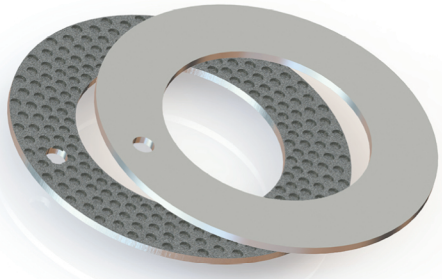

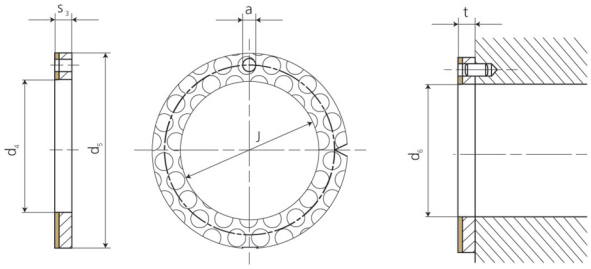

PAW - P20

Referência	Peso g	Medidas					Medidas de montagem	
		d_4 +0.25	d_5 -0.25	s_3 -0.05	J ±0.12	a $^{+0.4}_{+0.1}$	t ±0.2	d_6 +0.12
PAW 12 P20	3.5	12	24	1.5	18	1.5	1	24
PAW 14 P20	3.7	14	26	1.5	20	2	1	26
PAW 18 P20	5.6	18	32	1.5	25	2	1	32
PAW 20 P20	7.4	20	36	1.5	28	3	1	36
PAW 22 P20	7.9	22	38	1.5	30	3	1	38
PAW 26 P20	10.3	26	44	1.5	35	3	1	44
PAW 28 P20	12.4	28	48	1.5	38	4	1	48
PAW 32 P20	15.2	32	54	1.5	43	4	1	54
PAW 38 P20	19.5	38	62	1.5	50	4	1	62
PAW 42 P20	20.8	42	66	1.5	54	4	1	66
PAW 48 P20	34.9	48	74	2	61	4	1.5	74
PAW 52 P20	36.1	52	78	2	65	4	1.5	78

POLY LANEMA

03

03 SILENCIADORES E FILTROS BRONFIL

COM ROSCA AUTOBLOCANTE
COM ROSCA DE LATÃO MACIÇO
FILTROS BRONFIL

03 SILENCIADORES E FILTROS

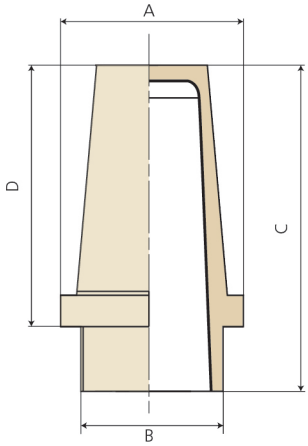

C/ ROSCA AUTOBLOCANTE

Tipo	A	B	C	D	Sup. útil em cm²	Caudal de ar
1/8″	0.15	1/8″	24	17.5	3.50	875
1/8″ BPC	0.25	1/8″	30	23.5	4.40	1,835
1/4″	0.2	1/4″	27	18.5	6.00	1,500
1/4″ BPC	0.15	1/4″	38	29.5	9.10	3,410
3/8″	0.25	3/8″	35	25	10.00	2,500
3/8″ BPC	0.2	3/8″	46	36	14.80	5,550
1/2″	0.15	1/2″	44	33	18.00	4,500
1/2″ BPC	0.25	1/2″	58	47	23.66	8,875
3/4″	0.2	3/4″	60	46.6	32.00	8,000
3/4″ BPC	0.15	3/4″	69	55.5	37.00	13,875
1″	0.25	1″	71	56	45.00	15,500

FILTROS

D	L
4	4
6	3
6	6
8	10
10	4
10	10
12	10
12	12
12	15
14	10
16	10
28	3

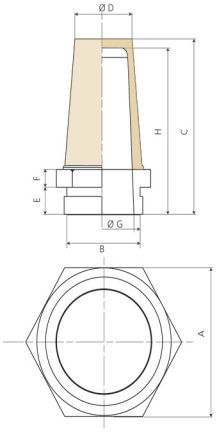

C/ ROSCA DE LATÃO MACIÇO

Tipo	A	B	C	D	E	F	G	H	Sup. útil em cm²	Caudal de ar
M5	8	M5	19	5.4	4	3	3	17.3	1.50	630
1/8″	12	1/8″	23.5	7.8	5	3.5	5.1	21.5	3.10	1,100
1/8″ BPC	12	1/8″	28.9	7.8	5	3.5	5.1	26.9	4.20	2,210
1/4″	15	1/4″	29.6	9.5	6	4.6	7.1	27.3	5.10	2,225
1/4″ BPC	15	1/4″	36.4	9.5	6	4.6	7.1	34.1	6.90	3,040
3/8″	19	3/8″	36.8	12.6	7	5.5	9	34.2	8.60	2,905
3/8″ BPC	19	3/8″	45.7	12.6	7	5.5	9	43.1	11.70	4,205
1/2″	23	1/2″	45.6	16	8.5	6.2	13.2	42.6	15.85	4,620
1/2″ BPC	23	1/2″	57.1	16	8.5	6.2	13.2	54.1	21.40	7,225
3/4″	29	3/4″	56.3	20.4	10	7	17.6	52.8	26.10	7,075
3/4″ BPC	29	3/4″	71.5	20.4	10	7	17.6	68.0	35.20	11,535
1″	36	1″	70	26	12	8	24	66	41.80	16,935

POLY LANEMA

05

CHAVETAS

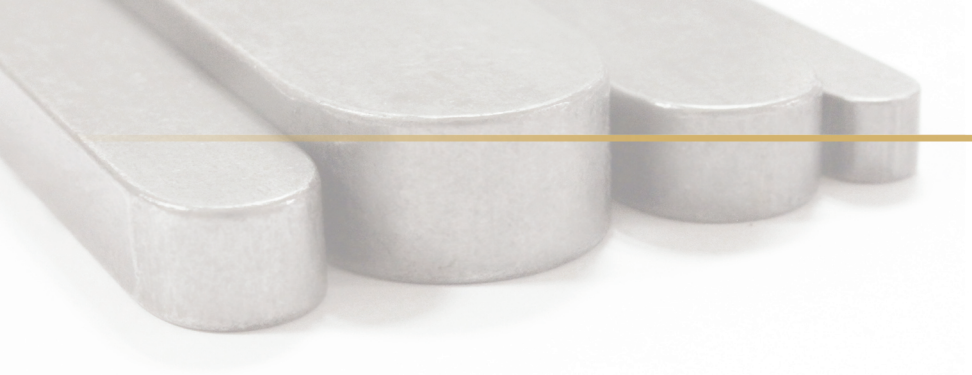

CHAVETAS

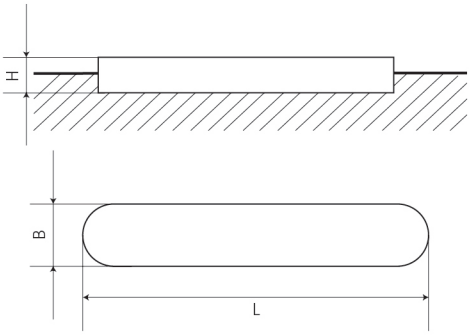

DIN 6885 - A

AÇO C45K

Referência	B x H x L
51A-2-2-10	2 x 2 x 10
51A-2-2-12	2 x 2 x 12
51A-2-2-14	2 x 2 x 14
51A-2-2-15	2 x 2 x 15
51A-2-2-16	2 x 2 x 16
51A-2-2-18	2 x 2 x 18
51A-2-2-20	2 x 2 x 20
51A-2-2-22	2 x 2 x 22
51A-2-2-25	2 x 2 x 25
51A-2-2-28	2 x 2 x 28
51A-2-2-30	2 x 2 x 30
51A-2-2-32	2 x 2 x 32
51A-2-2-35	2 x 2 x 35
51A-2-2-36	2 x 2 x 36
51A-3-3-8	3 x 3 x 8
51A-3-3-10	3 x 3 x 10
51A-3-3-12	3 x 3 x 12
51A-3-3-14	3 x 3 x 14
51A-3-3-15	3 x 3 x 15
51A-3-3-16	3 x 3 x 16
51A-3-3-18	3 x 3 x 18
51A-3-3-20	3 x 3 x 20
51A-3-3-22	3 x 3 x 22
51A-3-3-25	3 x 3 x 25
51A-3-3-28	3 x 3 x 28
51A-3-3-30	3 x 3 x 30
51A-3-3-32	3 x 3 x 32
51A-3-3-35	3 x 3 x 35
51A-3-3-36	3 x 3 x 36
51A-4-4-8	4 x 4 x 8
51A-4-4-10	4 x 4 x 10
51A-4-4-12	4 x 4 x 12
51A-4-4-14	4 x 4 x 14
51A-4-4-15	4 x 4 x 15
51A-4-4-16	4 x 4 x 16
51A-4-4-18	4 x 4 x 18
51A-4-4-20	4 x 4 x 20
51A-4-4-22	4 x 4 x 22
51A-4-4-25	4 x 4 x 25
51A-4-4-28	4 x 4 x 28
51A-4-4-30	4 x 4 x 30
51A-4-4-32	4 x 4 x 32
51A-4-4-35	4 x 4 x 35
51A-4-4-36	4 x 4 x 36
51A-4-4-40	4 x 4 x 40
51A-4-4-45	4 x 4 x 45

Referência	B x H x L
51A-4-4-50	4 x 4 x 50
51A-5-5-10	5 x 5 x 10
51A-5-5-12	5 x 5 x 12
51A-5-5-14	5 x 5 x 14
51A-5-5-15	5 x 5 x 15
51A-5-5-16	5 x 5 x 16
51A-5-5-18	5 x 5 x 18
51A-5-5-20	5 x 5 x 20
51A-5-5-22	5 x 5 x 22
51A-5-5-25	5 x 5 x 25
51A-5-5-28	5 x 5 x 28
51A-5-5-30	5 x 5 x 30
51A-5-5-32	5 x 5 x 32
51A-5-5-35	5 x 5 x 35
51A-5-5-36	5 x 5 x 36
51A-5-5-40	5 x 5 x 40
51A-5-5-45	5 x 5 x 45
51A-5-5-50	5 x 5 x 50
51A-5-5-55	5 x 5 x 55
51A-5-5-56	5 x 5 x 56
51A-5-5-60	5 x 5 x 60
51A-5-5-63	5 x 5 x 63
51A-5-5-65	5 x 5 x 65
51A-6-6-10	6 x 6 x 10
51A-6-6-12	6 x 6 x 12
51A-6-6-14	6 x 6 x 14
51A-6-6-15	6 x 6 x 15
51A-6-6-16	6 x 6 x 16
51A-6-6-18	6 x 6 x 18
51A-6-6-20	6 x 6 x 20
51A-6-6-22	6 x 6 x 22
51A-6-6-25	6 x 6 x 25
51A-6-6-28	6 x 6 x 28
51A-6-6-30	6 x 6 x 30
51A-6-6-32	6 x 6 x 32
51A-6-6-35	6 x 6 x 35
51A-6-6-36	6 x 6 x 36
51A-6-6-40	6 x 6 x 40
51A-6-6-45	6 x 6 x 45
51A-6-6-50	6 x 6 x 50
51A-6-6-55	6 x 6 x 55
51A-6-6-56	6 x 6 x 56
51A-6-6-60	6 x 6 x 60
51A-6-6-63	6 x 6 x 63
51A-6-6-65	6 x 6 x 65
51A-6-6-70	6 x 6 x 70

Referência	B x H x L
51A-6-6-75	6 x 6 x 75
51A-8-7-12	8 x 7 x 12
51A-8-7-14	8 x 7 x 14
51A-8-7-15	8 x 7 x 15
51A-8-7-16	8 x 7 x 16
51A-8-7-18	8 x 7 x 18
51A-8-7-20	8 x 7 x 20
51A-8-7-22	8 x 7 x 22
51A-8-7-25	8 x 7 x 25
51A-8-7-28	8 x 7 x 28
51A-8-7-30	8 x 7 x 30
51A-8-7-32	8 x 7 x 32
51A-8-7-35	8 x 7 x 35
51A-8-7-36	8 x 7 x 36
51A-8-7-40	8 x 7 x 40
51A-8-7-45	8 x 7 x 45
51A-8-7-50	8 x 7 x 50
51A-8-7-55	8 x 7 x 55
51A-8-7-56	8 x 7 x 56
51A-8-7-60	8 x 7 x 60
51A-8-7-63	8 x 7 x 63
51A-8-7-65	8 x 7 x 65
51A-8-7-70	8 x 7 x 70
51A-8-7-75	8 x 7 x 75
51A-8-7-80	8 x 7 x 80
51A-8-7-85	8 x 7 x 85
51A-8-7-90	8 x 7 x 90
51A-8-7-95	8 x 7 x 95
51A-8-7-100	8 x 7 x 100
51A-8-7-110	8 x 7 x 110
51A-8-7-120	8 x 7 x 120
51A-8-7-125	8 x 7 x 125
51A-8-7-130	8 x 7 x 130
51A-8-7-140	8 x 7 x 140
51A-8-7-150	8 x 7 x 150
51A-8-7-180	8 x 7 x 180
51A-10-8-14	10 x 8 x 14
51A-10-8-15	10 x 8 x 15
51A-10-8-16	10 x 8 x 16
51A-10-8-18	10 x 8 x 18
51A-10-8-20	10 x 8 x 20
51A-10-8-22	10 x 8 x 22
51A-10-8-25	10 x 8 x 25
51A-10-8-28	10 x 8 x 28
51A-10-8-30	10 x 8 x 30
51A-10-8-32	10 x 8 x 32

Referência	B x H x L
51A-10-8-35	10 x 8 x 35
51A-10-8-36	10 x 8 x 36
51A-10-8-40	10 x 8 x 40
51A-10-8-45	10 x 8 x 45
51A-10-8-50	10 x 8 x 50
51A-10-8-55	10 x 8 x 55
51A-10-8-56	10 x 8 x 56
51A-10-8-60	10 x 8 x 60
51A-10-8-63	10 x 8 x 63
51A-10-8-65	10 x 8 x 65
51A-10-8-70	10 x 8 x 70
51A-10-8-75	10 x 8 x 75
51A-10-8-80	10 x 8 x 80
51A-10-8-85	10 x 8 x 85
51A-10-8-90	10 x 8 x 90
51A-10-8-95	10 x 8 x 95
51A-10-8-100	10 x 8 x 100
51A-10-8-110	10 x 8 x 110
51A-10-8-120	10 x 8 x 120
51A-10-8-125	10 x 8 x 125
51A-10-8-130	10 x 8 x 130
51A-10-8-140	10 x 8 x 140
51A-10-8-150	10 x 8 x 150
51A-10-8-160	10 x 8 x 160
51A-10-8-200	10 x 8 x 200
51A-12-8-20	12 x 8 x 20
51A-12-8-22	12 x 8 x 22
51A-12-8-25	12 x 8 x 25
51A-12-8-28	12 x 8 x 28
51A-12-8-30	12 x 8 x 30
51A-12-8-32	12 x 8 x 32
51A-12-8-35	12 x 8 x 35
51A-12-8-36	12 x 8 x 36
51A-12-8-40	12 x 8 x 40
51A-12-8-45	12 x 8 x 45
51A-12-8-50	12 x 8 x 50
51A-12-8-55	12 x 8 x 55
51A-12-8-56	12 x 8 x 56
51A-12-8-60	12 x 8 x 60
51A-12-8-63	12 x 8 x 63
51A-12-8-65	12 x 8 x 65
51A-12-8-70	12 x 8 x 70
51A-12-8-75	12 x 8 x 75
51A-12-8-80	12 x 8 x 80
51A-12-8-85	12 x 8 x 85
51A-12-8-90	12 x 8 x 90

Referência	B x H x L
51A-12-8-95	12 x 8 x 95
51A-12-8-100	12 x 8 x 100
51A-12-8-110	12 x 8 x 110
51A-12-8-120	12 x 8 x 120
51A-12-8-125	12 x 8 x 125
51A-12-8-130	12 x 8 x 130
51A-12-8-140	12 x 8 x 140
51A-12-8-150	12 x 8 x 150
51A-12-8-160	12 x 8 x 160
51A-12-8-180	12 x 8 x 180
51A-14-9-25	14 x 9 x 25
51A-14-9-28	14 x 9 x 28
51A-14-9-30	14 x 9 x 30
51A-14-9-32	14 x 9 x 32
51A-14-9-35	14 x 9 x 35
51A-14-9-36	14 x 9 x 36
51A-14-9-40	14 x 9 x 40
51A-14-9-45	14 x 9 x 45
51A-14-9-50	14 x 9 x 50
51A-14-9-55	14 x 9 x 55
51A-14-9-56	14 x 9 x 56
51A-14-9-60	14 x 9 x 60
51A-14-9-63	14 x 9 x 63
51A-14-9-65	14 x 9 x 65
51A-14-9-70	14 x 9 x 70
51A-14-9-75	14 x 9 x 75
51A-14-9-80	14 x 9 x 80
51A-14-9-85	14 x 9 x 85
51A-14-9-90	14 x 9 x 90
51A-14-9-95	14 x 9 x 95
51A-14-9-100	14 x 9 x 100
51A-14-9-110	14 x 9 x 110
51A-14-9-120	14 x 9 x 120
51A-14-9-125	14 x 9 x 125
51A-14-9-130	14 x 9 x 130
51A-14-9-140	14 x 9 x 140
51A-14-9-150	14 x 9 x 150
51A-14-9-160	14 x 9 x 160
51A-14-9-180	14 x 9 x 180
51A-14-9-200	14 x 9 x 200
51A-16-10-30	16 x 10 x 30
51A-16-10-32	16 x 10 x 32
51A-16-10-35	16 x 10 x 35
51A-16-10-36	16 x 10 x 36
51A-16-10-40	16 x 10 x 40
51A-16-10-45	16 x 10 x 45

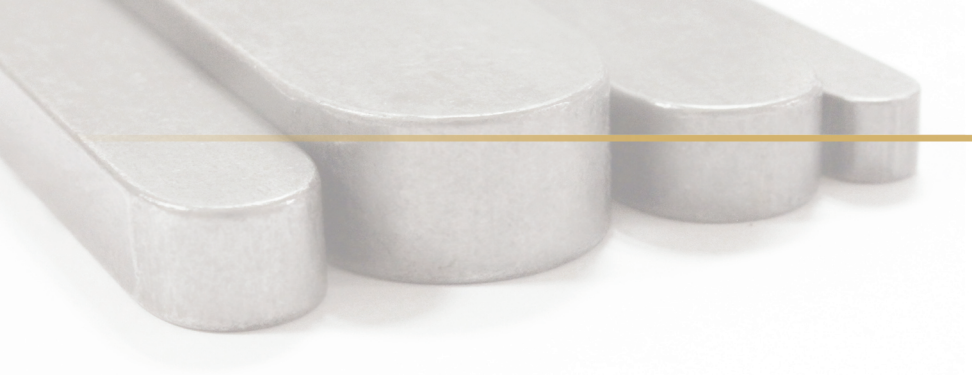

05 CHAVETAS

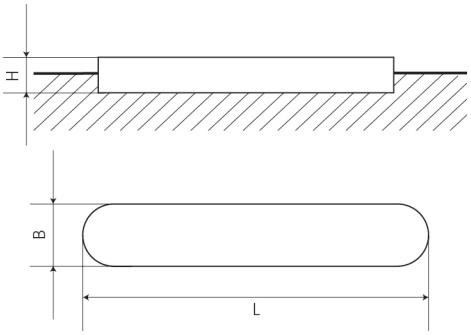

DIN 6885 - A

AÇO C45K

Referência	B x H x L
51A-16-10-50	16 x 10 x 50
51A-16-10-55	16 x 10 x 55
51A-16-10-56	16 x 10 x 56
51A-16-10-60	16 x 10 x 60
51A-16-10-63	16 x 10 x 63
51A-16-10-65	16 x 10 x 65
51A-16-10-70	16 x 10 x 70
51A-16-10-75	16 x 10 x 75
51A-16-10-80	16 x 10 x 80
51A-16-10-85	16 x 10 x 85
51A-16-10-90	16 x 10 x 90
51A-16-10-95	16 x 10 x 95
51A-16-10-100	16 x 10 x 100
51A-16-10-110	16 x 10 x 110
51A-16-10-120	16 x 10 x 120
51A-16-10-125	16 x 10 x 125
51A-16-10-130	16 x 10 x 130
51A-16-10-140	16 x 10 x 140
51A-16-10-150	16 x 10 x 150
51A-16-10-160	16 x 10 x 160
51A-16-10-180	16 x 10 x 180
51A-16-10-200	16 x 10 x 200
51A-18-11-45	18 x 11 x 45
51A-18-11-50	18 x 11 x 50
51A-18-11-55	18 x 11 x 55
51A-18-11-56	18 x 11 x 56
51A-18-11-60	18 x 11 x 60
51A-18-11-63	18 x 11 x 63
51A-18-11-65	18 x 11 x 65
51A-18-11-70	18 x 11 x 70
51A-18-11-75	18 x 11 x 75
51A-18-11-80	18 x 11 x 80
51A-18-11-85	18 x 11 x 85
51A-18-11-90	18 x 11 x 90
51A-18-11-95	18 x 11 x 95
51A-18-11-100	18 x 11 x 100
51A-18-11-110	18 x 11 x 110
51A-18-11-120	18 x 11 x 120
51A-18-11-125	18 x 11 x 125
51A-18-11-130	18 x 11 x 130
51A-18-11-140	18 x 11 x 140
51A-18-11-150	18 x 11 x 150
51A-18-11-160	18 x 11 x 160
51A-18-11-170	18 x 11 x 170
51A-18-11-180	18 x 11 x 180
51A-18-11-200	18 x 11 x 200

Referência	B x H x L
51A-20-12-50	20 x 12 x 50
51A-20-12-56	20 x 12 x 56
51A-20-12-60	20 x 12 x 60
51A-20-12-63	20 x 12 x 63
51A-20-12-65	20 x 12 x 65
51A-20-12-70	20 x 12 x 70
51A-20-12-75	20 x 12 x 75
51A-20-12-80	20 x 12 x 80
51A-20-12-85	20 x 12 x 85
51A-20-12-90	20 x 12 x 90
51A-20-12-95	20 x 12 x 95
51A-20-12-100	20 x 12 x 100
51A-20-12-110	20 x 12 x 110
51A-20-12-120	20 x 12 x 120
51A-20-12-125	20 x 12 x 125
51A-20-12-130	20 x 12 x 130
51A-20-12-140	20 x 12 x 140
51A-20-12-150	20 x 12 x 150
51A-20-12-160	20 x 12 x 160
51A-20-12-170	20 x 12 x 170
51A-20-12-180	20 x 12 x 180
51A-20-12-200	20 x 12 x 200
51A-22-14-60	22 x 14 x 60
51A-22-14-63	22 x 14 x 63
51A-22-14-65	22 x 14 x 65
51A-22-14-70	22 x 14 x 70
51A-22-14-75	22 x 14 x 75
51A-22-14-80	22 x 14 x 80
51A-22-14-85	22 x 14 x 85
51A-22-14-90	22 x 14 x 90
51A-22-14-95	22 x 14 x 95
51A-22-14-100	22 x 14 x 100
51A-22-14-110	22 x 14 x 110
51A-22-14-120	22 x 14 x 120
51A-22-14-125	22 x 14 x 125
51A-22-14-130	22 x 14 x 130
51A-22-14-140	22 x 14 x 140
51A-22-14-150	22 x 14 x 150
51A-22-14-160	22 x 14 x 160
51A-22-14-170	22 x 14 x 170
51A-22-14-180	22 x 14 x 180
51A-22-14-200	22 x 14 x 200
51A-22-14-220	22 x 14 x 220
51A-22-14-250	22 x 14 x 250
51A-25-14-65	25 x 14 x 65
51A-25-14-70	25 x 14 x 70

Referência	B x H x L
51A-25-14-75	25 x 14 x 75
51A-25-14-80	25 x 14 x 80
51A-25-14-85	25 x 14 x 85
51A-25-14-90	25 x 14 x 90
51A-25-14-95	25 x 14 x 95
51A-25-14-100	25 x 14 x 100
51A-25-14-110	25 x 14 x 110
51A-25-14-120	25 x 14 x 120
51A-25-14-125	25 x 14 x 125
51A-25-14-130	25 x 14 x 130
51A-25-14-140	25 x 14 x 140
51A-25-14-150	25 x 14 x 150
51A-25-14-170	25 x 14 x 170
51A-25-14-180	25 x 14 x 180
51A-25-14-200	25 x 14 x 200
51A-25-14-220	25 x 14 x 220
51A-25-14-250	25 x 14 x 250
51A-28-16-75	28 x 16 x 75
51A-28-16-80	28 x 16 x 80
51A-28-16-85	28 x 16 x 85
51A-28-16-90	28 x 16 x 90
51A-28-16-95	28 x 16 x 95
51A-28-16-100	28 x 16 x 100
51A-28-16-110	28 x 16 x 110
51A-28-16-120	28 x 16 x 120
51A-28-16-125	28 x 16 x 125
51A-28-16-130	28 x 16 x 130
51A-28-16-140	28 x 16 x 140
51A-28-16-150	28 x 16 x 150
51A-28-16-160	28 x 16 x 160
51A-28-16-170	28 x 16 x 170
51A-28-16-180	28 x 16 x 180
51A-28-16-220	28 x 16 x 220
51A-28-16-250	28 x 16 x 250
51A-28-16-280	28 x 16 x 280
51A-28-16-320	28 x 16 x 320
51A-32-18-85	32 x 18 x 85
51A-32-18-90	32 x 18 x 90
51A-32-18-95	32 x 18 x 95
51A-32-18-100	32 x 18 x 100
51A-32-18-110	32 x 18 x 110
51A-32-18-120	32 x 18 x 120
51A-32-18-125	32 x 18 x 125
51A-32-18-140	32 x 18 x 140
51A-32-18-150	32 x 18 x 150
51A-32-18-160	32 x 18 x 160

Referência	B x H x L
51A-32-18-170	32 x 18 x 170
51A-32-18-180	32 x 18 x 180
51A-32-18-200	32 x 18 x 200
51A-32-18-250	32 x 18 x 250
51A-32-18-280	32 x 18 x 280
51A-32-18-320	32 x 18 x 320
51A-32-18-360	32 x 18 x 360
51A-36-20-95	36 x 20 x 95
51A-36-20-100	36 x 20 x 100
51A-36-20-110	36 x 20 x 110
51A-36-20-120	36 x 20 x 120
51A-36-20-125	36 x 20 x 125
51A-36-20-130	36 x 20 x 130
51A-36-20-140	36 x 20 x 140
51A-36-20-150	36 x 20 x 150
51A-36-20-160	36 x 20 x 160
51A-36-20-170	36 x 20 x 170
51A-36-20-180	36 x 20 x 180
51A-36-20-200	36 x 20 x 200
51A-36-20-220	36 x 20 x 220
51A-36-20-250	36 x 20 x 250
51A-36-20-280	36 x 20 x 280
51A-40-22-110	40 x 22 x 110
51A-40-22-120	40 x 22 x 120
51A-40-22-125	40 x 22 x 125
51A-40-22-130	40 x 22 x 130
51A-40-22-140	40 x 22 x 140
51A-40-22-150	40 x 22 x 150
51A-40-22-160	40 x 22 x 160
51A-40-22-170	40 x 22 x 170
51A-40-22-180	40 x 22 x 180
51A-40-22-200	40 x 22 x 200
51A-40-22-220	40 x 22 x 220
51A-40-22-250	40 x 22 x 250
51A-40-22-280	40 x 22 x 280
51A-40-22-320	40 x 22 x 320
51A-40-22-360	40 x 22 x 360
51A-40-22-400	40 x 22 x 400
51A-45-25-120	45 x 25 x 120
51A-45-25-125	45 x 25 x 125
51A-45-25-130	45 x 25 x 130
51A-45-25-140	45 x 25 x 140
51A-45-25-150	45 x 25 x 150
51A-45-25-160	45 x 25 x 160
51A-45-25-170	45 x 25 x 170
51A-45-25-180	45 x 25 x 180

Referência	B x H x L
51A-45-25-200	45 x 25 x 200
51A-45-25-220	45 x 25 x 220
51A-45-25-250	45 x 25 x 250
51A-45-25-280	45 x 25 x 280
51A-45-25-320	45 x 25 x 320
51A-45-25-360	45 x 25 x 360
51A-45-25-400	45 x 25 x 400

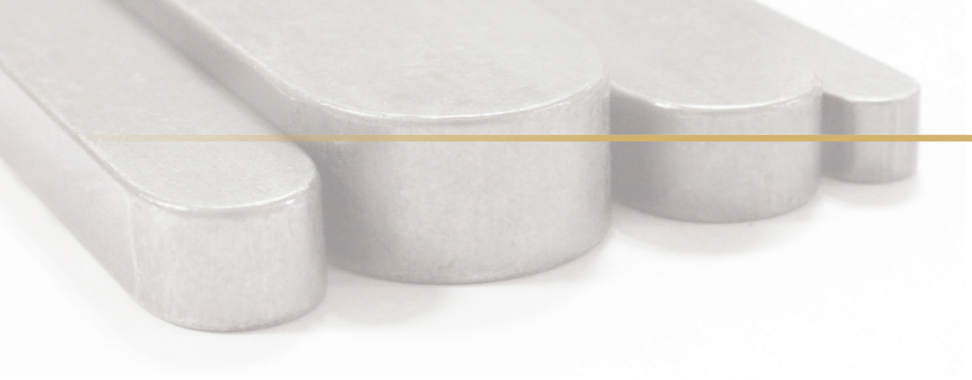

05 CHAVETAS

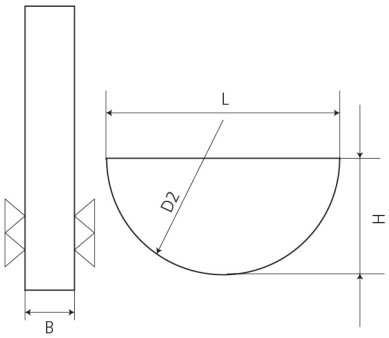

CHAVETAS DE DISCO

Referência	B x H x L
81-1.5-2.6-7	1.5 x 2.6 x 7
81-2-2.6-7	2 x 2.6 x 7
81-2-3.7-10	2 x 3.7 x 10
81-2.5-3.7-10	2.5 x 3.7 x 10
81-2-5-13	2 x 5 x 13
81-3-5-13	3 x 5 x 13
81-4-5-13	4 x 5 x 13
81-3-6.5-16	3 x 6.5 x 16
81-4-6.5-16	4 x 6.5 x 16
81-5-6.5-16	5 x 6.5 x 16
81-4-7.5-19	4 x 7.5 x 19
81-5-7.5-19	5 x 7.5 x 19
81-6-7.5-19	6 x 7.5 x 19
81-5-9-22	5 x 9 x 22
81-6-9-22	6 x 9 x 22
81-8-9-22	8 x 9 x 22
81-5-10-25	5 x 10 x 25
81-6-10-25	6 x 10 x 25
81-7-10-25	7 x 10 x 25
81-6-11-28	6 x 11 x 28
81-8-11-28	8 x 11 x 28
81-10-11-28	10 x 11 x 28
81-8-13-32	8 x 13 x 32
81-10-13-32	10 x 13 x 32
81-10-16-45	10 x 16 x 45

DIN 6880 AÇO C45K

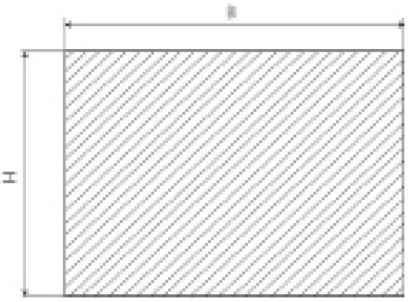

PERFIL PARA CHAVETAS

Referência	B x H x L
01-2-2	2 x 2
01-3-3	3 x 3
01-4-4	4 x 4
01-5-3	5 x 3
01-5-5	5 x 5
01-6-4	6 x 4
01-6-5	6 x 5
01-6-6	6 x 6
01-7-7	7 x 7
01-8-4	8 x 4
01-8-5	8 x 5
01-8-7	8 x 7
01-8-8	8 x 8
01-9-9	9 x 9
01-10-6	10 x 6
01-10-8	10 x 8
01-10-10	10 x 10
01-12-6	12 x 6
01-12-8	12 x 8
01-12-10	12 x 10
01-12-12	12 x 12
01-14-6	14 x 6
01-14-9	14 x 9
01-14-14	14 x 14

Referência	B x H x L
01-16-7	16 x 7
01-16-10	16 x 10
01-16-16	16 x 16
01-18-7	18 x 7
01-18-11	18 x 11
01-18-18	18 x 18
01-20-8	20 x 8
01-20-10	20 x 10
01-20-12	20 x 12
01-20-20	20 x 20
01-22-9	22 x 9
01-22-14	22 x 14
01-24-14	24 x 14
01-25-9	25 x 9
01-25-14	25 x 14
01-28-16	28 x 16
01-32-18	32 x 18
01-36-20	36 x 20
01-40-22	40 x 22
01-45-25	45 x 25
01-50-28	50 x 28
01-56-32	56 x 32
01-70-36	70 x 36
01-80-40	80 x 40

DIN 6880 AÇO C45K

POLY
LANEMA

Poly Lanema, Lda
Zona Industrial de Ovar
Rua do Brasil nº143 Apartado 169
3881-902 Ovar
Tlf.: + 351 256 581 400
Fax: + 351 256 581 419
lanema@lanema.pt
www.lanema.pt

Coordenadas Portugal:
Latitude: 40º 52' 55.164"
Longitude: -8º 37' 30.8742"

LANEMA de Aluminios y Plásticos, S.L.
Cª Ajalvir - Torrejón km 2,5
Pol. Compisa c/ de la Loma, 8-10
28864 Ajalvir
Tlf.: + 34 91 884 42 53 | + 34 91 884 46 29
Fax: + 34 91 884 46 47
lanema@lanema.es
www.lanema.es

Coordenadas Espanha:
Latitude: 40º 30' 32.7882"
Longitude: -3º 28' 56.2836"